SKILLING, HELLE, CHRISTIANSEN, ROBERTSON — Structural & Civil Engineers

PROJECT THE WORLD TRADE CENTER | TITLE SECTIONS AT EL. 290'-0" | DATE 1-16-70

REVISIONS

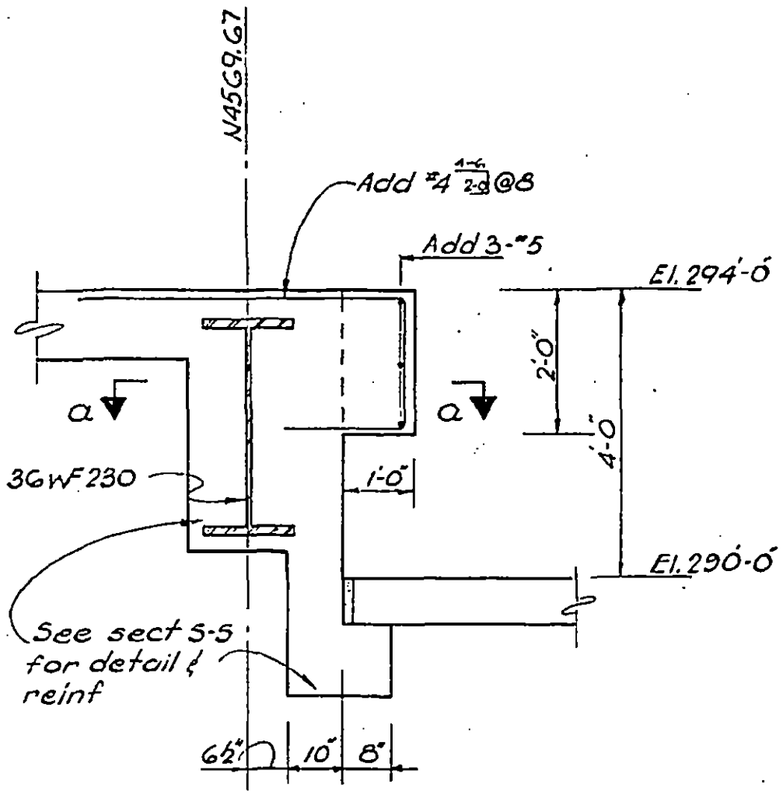

SECTION W-W
(½" = 1'-0")

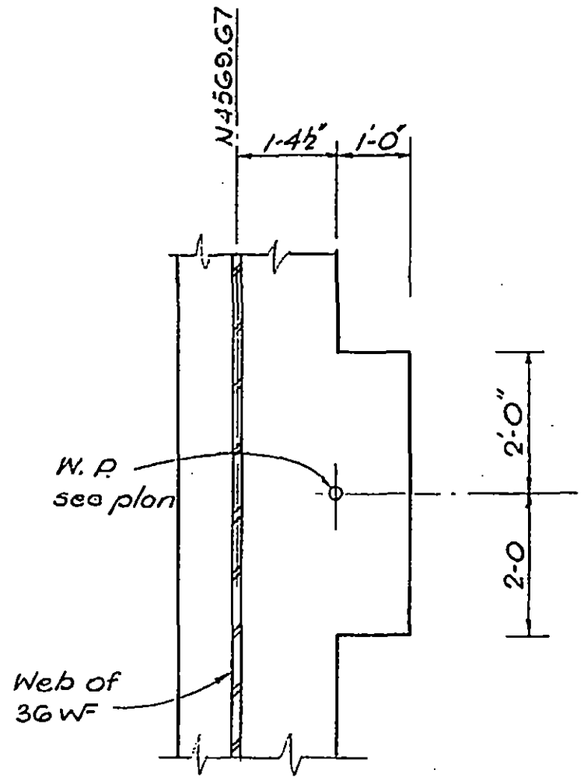

SECTION 0-0
(½" = 1'-0")

LICENSED PROFESSIONAL ENGINEER LESLIE E. ROBERTSON No. 34360 UNIVERSITY OF THE STATE OF NEW YORK

DESIGNED

DRAWN D.C. Huggins

REVIEWED E.L.

8-JK 50.14
JKB

WTC-1066-L, 3

SKILLING, HELLE, CHRISTIANSEN, ROBERTSON — Structural & Civil Engineers

PROJECT THE WORLD TRADE CENTER | TITLE DETAIL OF CONCRETE SUPPORT FOR 24"ϕ STEAM MAIN | DATE 1-27-70

REVISIONS

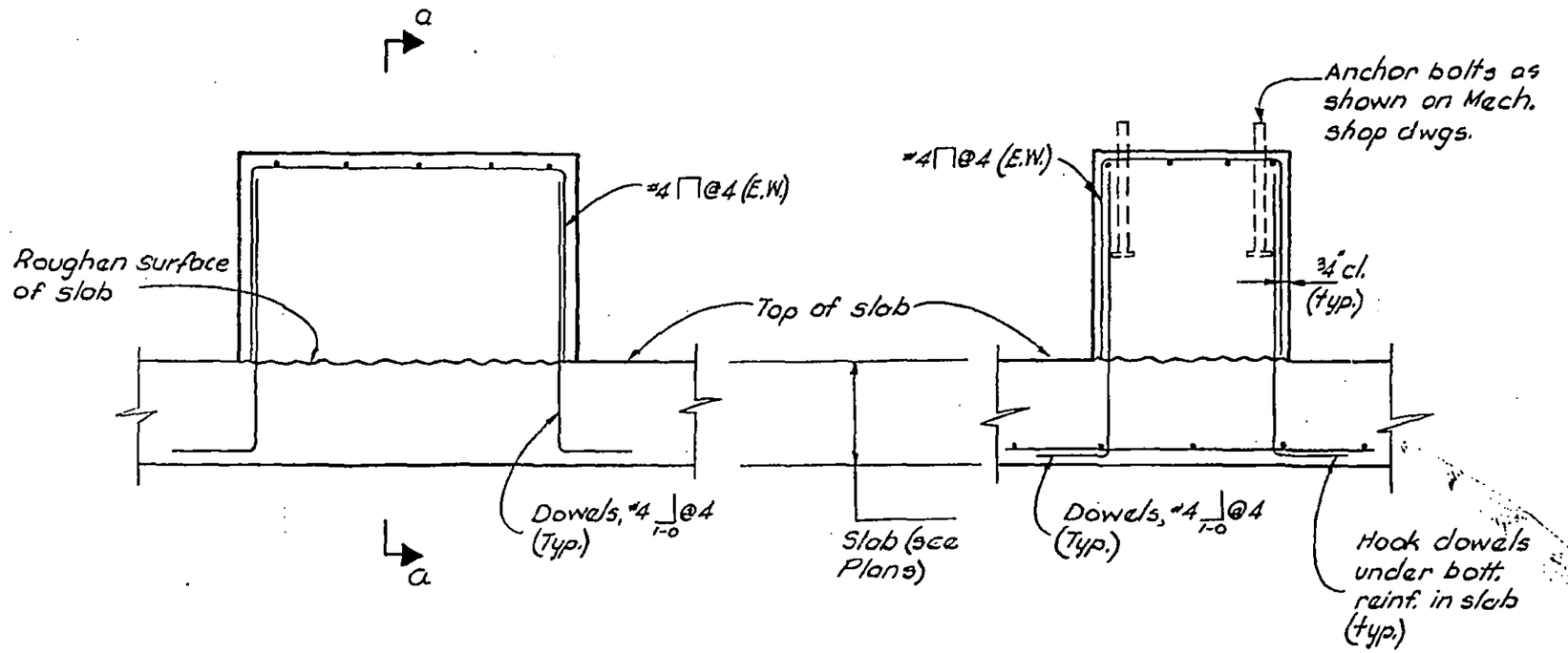

SECTION X-X
NO SCALE

SECTION a-a
NO SCALE

Notes
1. All conc. to be f'c = 3000 psi.
2. See Mech. shop Dwgs. (Sond-Courter Dwg. P-14) for dimensions of conc. supports

LICENSED PROFESSIONAL ENGINEER — LESLIE E. ROBERTSON — No 34360 — UNIVERSITY OF THE STATE OF NEW YORK

DESIGNED

DRAWN D. Huggins

REVIEWED E.L.

8-JK8-50.15

SKILLING, HELLE, CHRISTIANSEN, ROBERTSON — Structural & Civil Engineers

PROJECT: THE WORLD TRADE CENTER | TITLE: SECTION AT EL. 274'-0" | DATE: 1-31-69

REVISIONS

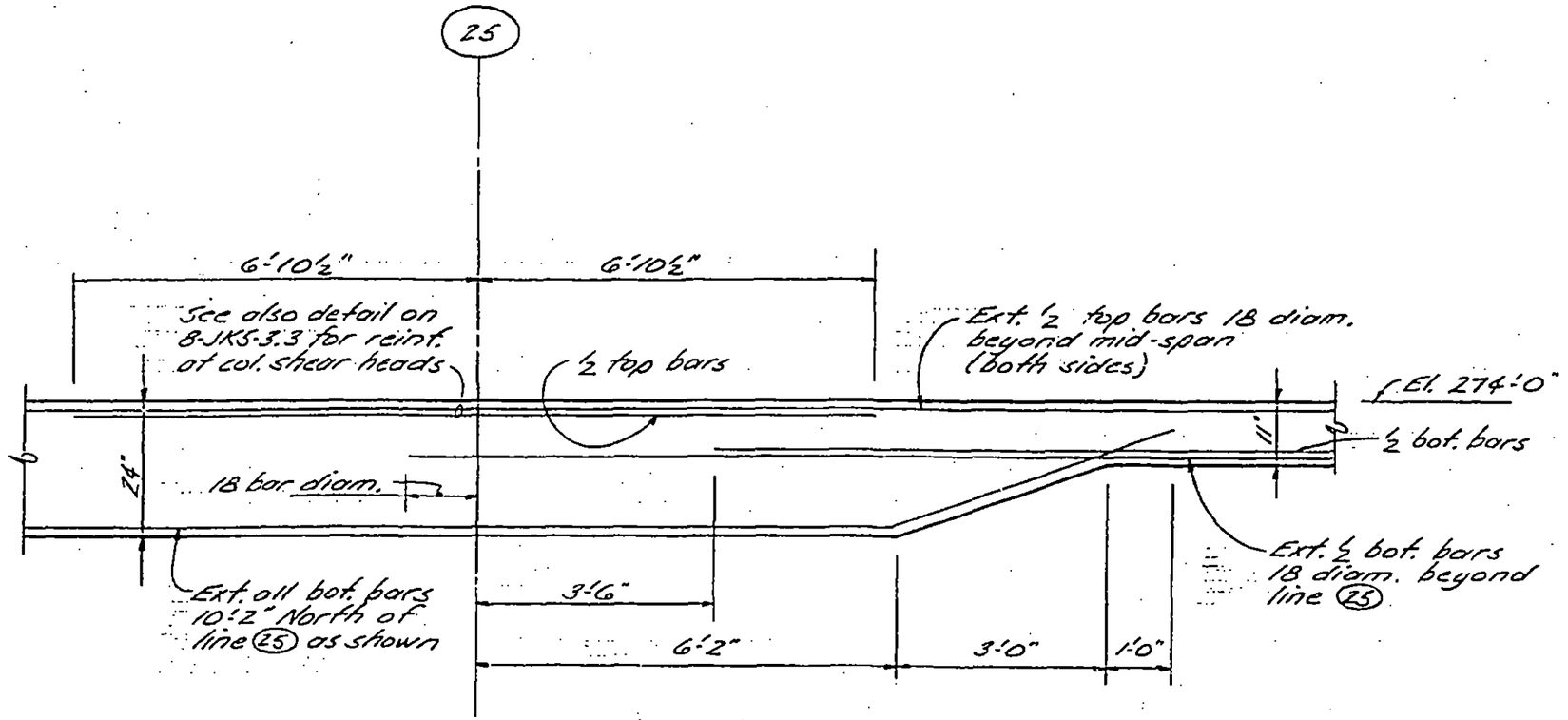

(This section applies to both column and middle strips)

Section A-A

LICENSED PROFESSIONAL ENGINEER — LESLIE E. ROBERTSON — No. 34350 — UNIVERSITY OF UTAH

DESIGNED

DRAWN: J. Adams

REVIEWED: E.L.

8-JKB-51.1

SKILLING, HELLE, CHRISTIANSEN, ROBERTSON — Structural & Civil Engineers

PROJECT: THE WORLD TRADE CENTER | TITLE: SECTION AT ELEV. 274 | DATE: 4-2-69

REVISIONS

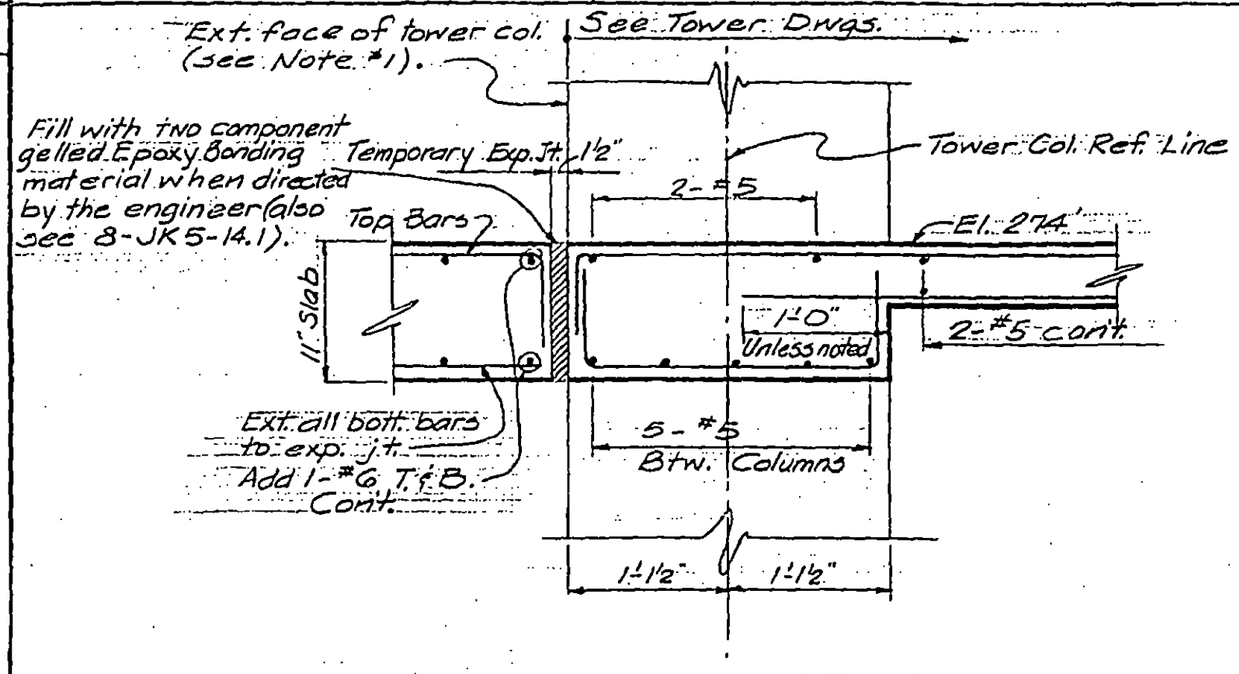

Section B-B

(SCJ-55)

NOTES:

1) Where Tower Diagonal-Plates occur, ½" joint shall be provided on all three sides of such plates.
2) See also 8-JK5-14.1.

LICENSED PROFESSIONAL ENGINEER — LESLIE E. ROBERTSON — No. 34360 — UNIVERSITY OF THE STATE OF NEW YORK

DESIGNED

DRAWN G.S.

REVIEWED E.L.

SKILLING, HELLE, CHRISTIANSEN, ROBERTSON — Structural & Civil Engineers

PROJECT THE WORLD TRADE CENTER | TITLE SECTION AT EL 274'-0" | DATE 4-21-69

REVISIONS

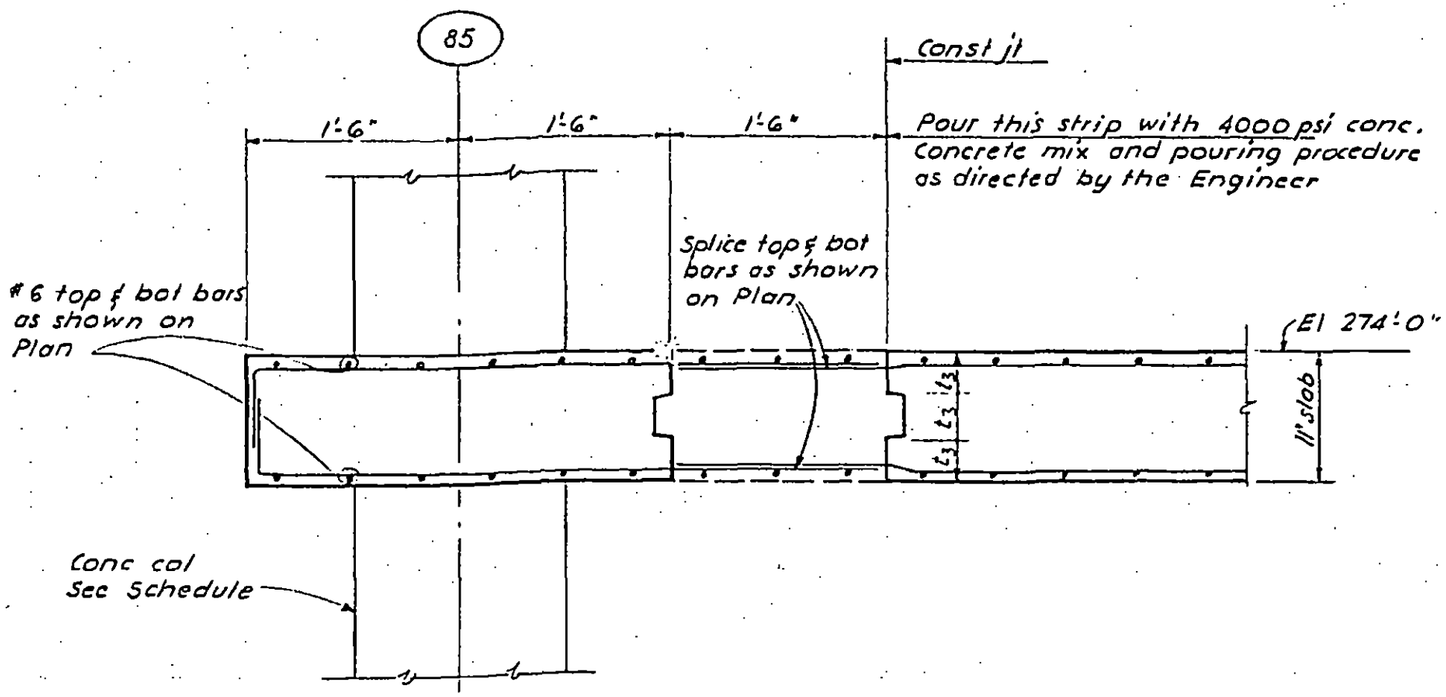

Section C-C

LICENSED PROFESSIONAL ENGINEER
LESLIE E. ROBERTSON
No. 34360
UNIVERSITY OF THE STATE OF NEW YORK

DESIGNED

DRAWN F.E.Smith

REVIEWED E.L.

8-JK8-51.3

SKILLING, HELLE, CHRISTIANSEN, ROBERTSON — Structural & Civil Engineers

PROJECT: THE WORLD TRADE CENTER | TITLE: SECTION AT EL 274'-0" | DATE: 6-27-69

REVISIONS

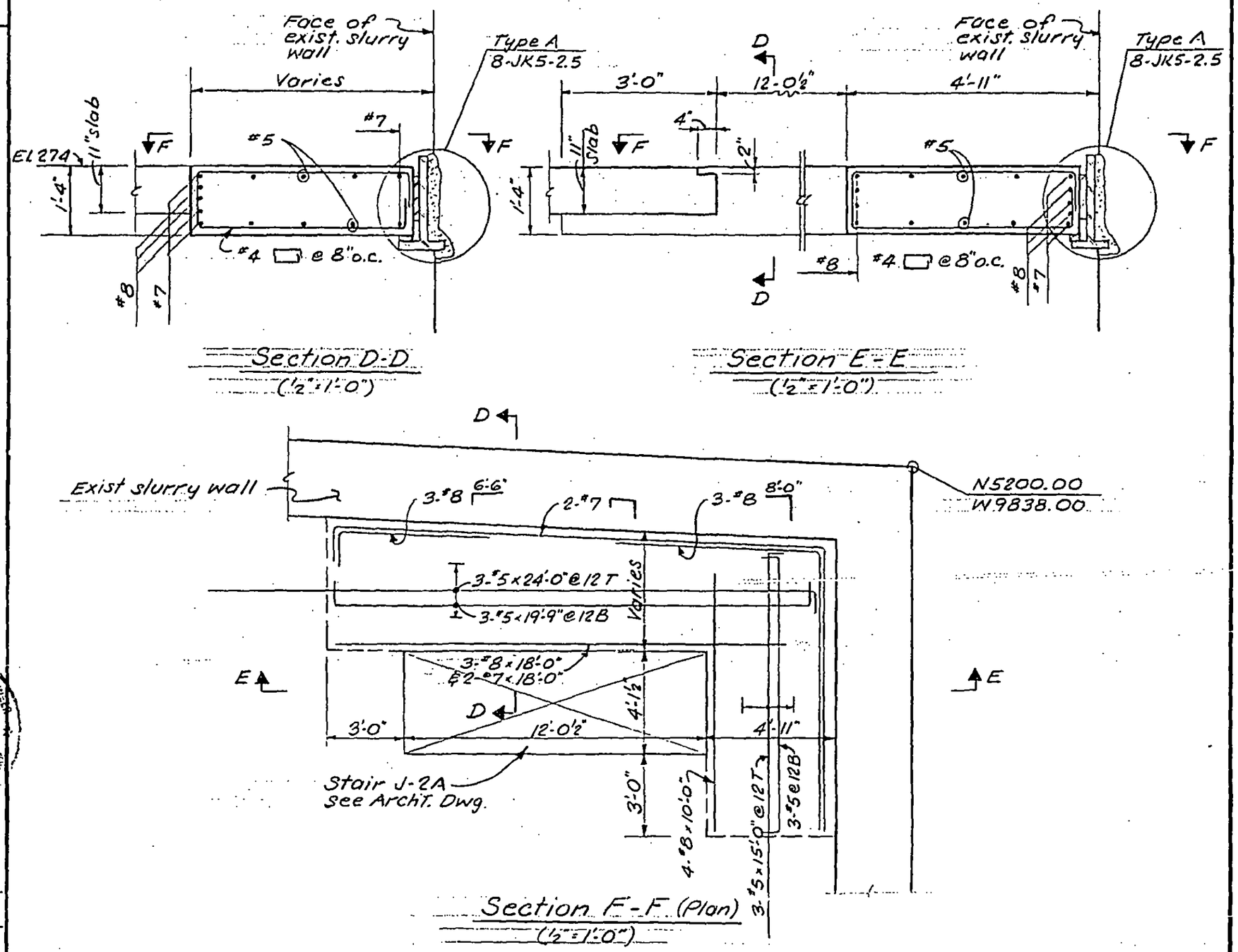

Section D-D (½"=1'-0")

Section E-E (½"=1'-0")

Section F-F (Plan) (½"=1'-0")

LICENSED PROFESSIONAL ENGINEER LESLIE E. ROBERTSON UNIVERSITY No. 84260

DESIGNED

DRAWN: F. Smith

REVIEWED: E.L.

8-JK8-51.4

SKILLING, HELLE, CHRISTIANSEN, ROBERTSON — Structural & Civil Engineers

PROJECT THE WORLD TRADE CENTER | TITLE SECTION AT EL 274'-0" | DATE 6-27-69

REVISIONS

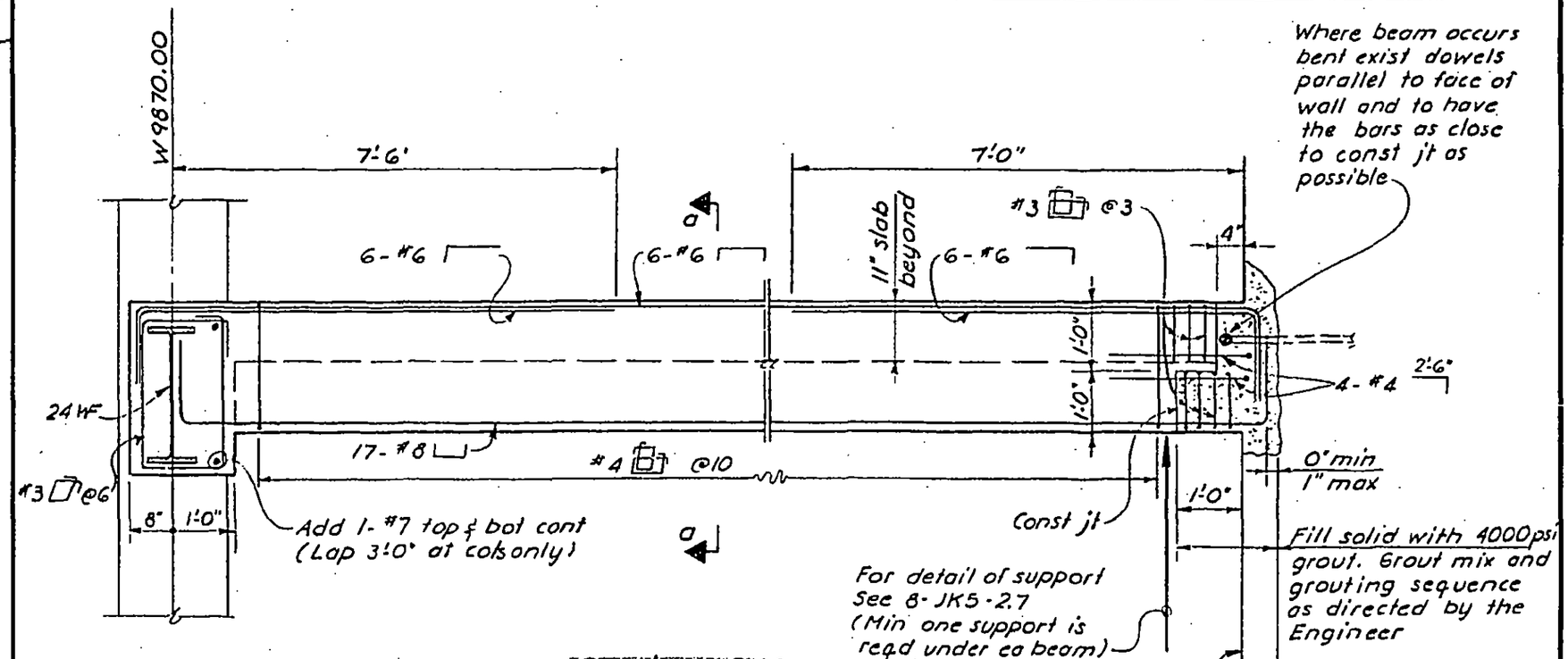

Section 6-6

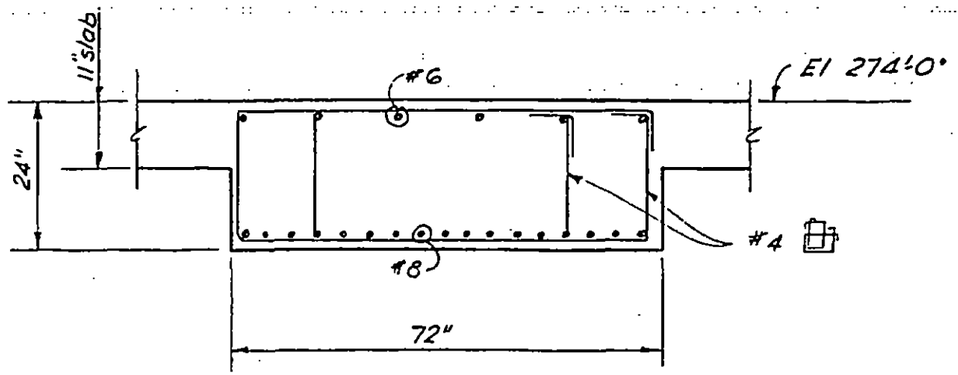

Section a-a

LICENSED PROFESSIONAL ENGINEER — LESLIE E. ROBERTSON — No. 34360 — UNIVERSITY OF

DESIGNED

DRAWN F. Smith

REVIEWED E.L.

8-JK8-51.5

SKILLING, HELLE, CHRISTIANSEN, ROBERTSON — Structural & Civil Engineers

PROJECT: THE WORLD TRADE CENTER | TITLE: SECTION AT EL 274'-0" | DATE: 6-27-69

REVISIONS

9-26-69

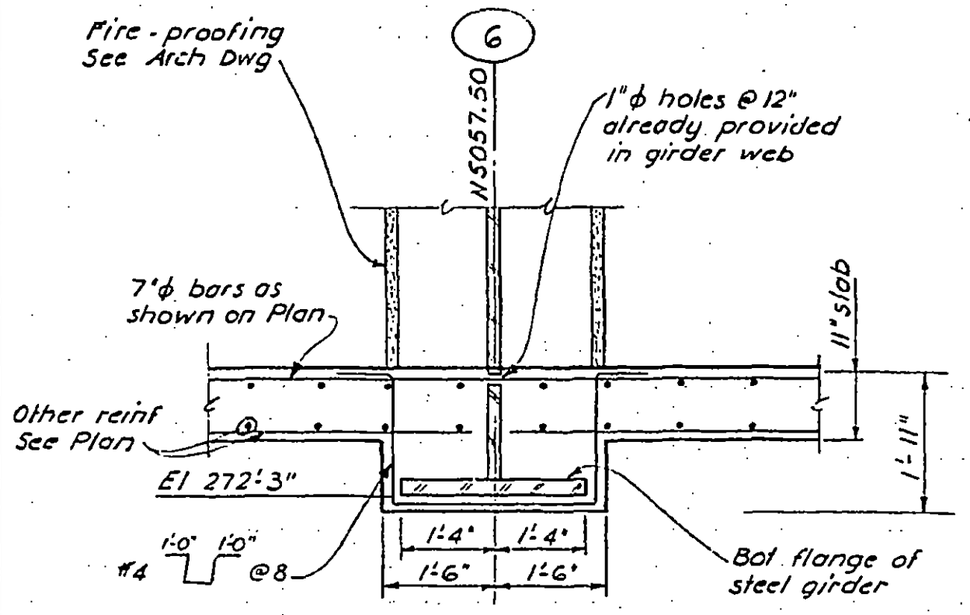

Section H-H
(½" = 1'-0")

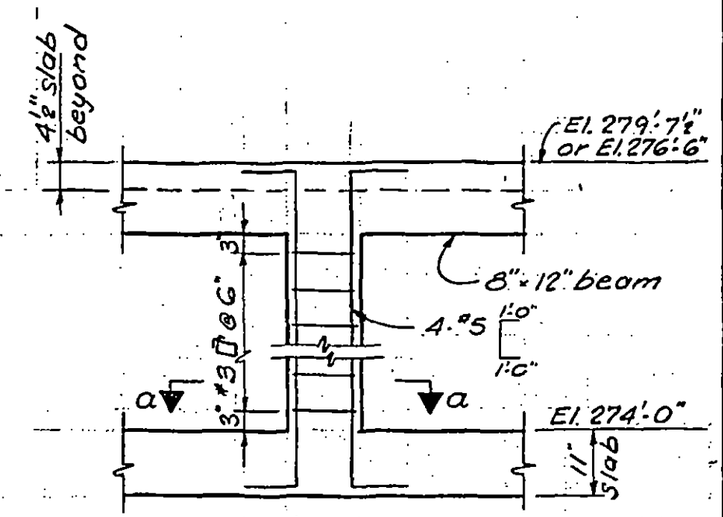

Section J-J
(½" = 1'-0")

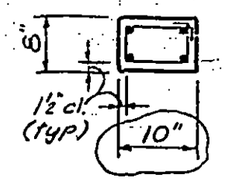

Section a-a
(½" = 1'-0")

LICENSED PROFESSIONAL ENGINEER
LESLIE E. ROBERTSON
No. 34360
UNIVERSITY OF THE STATE OF NEW YORK

DESIGNED

DRAWN F. Smith

REVIEWED E.L.

8-JK8-51.6

SKILLING, HELLE, CHRISTIANSEN, ROBERTSON — Structural & Civil Engineers

PROJECT THE WORLD TRADE CENTER | TITLE SECTIONS AT EL. 274'-0" | DATE 7-14-69

REVISIONS

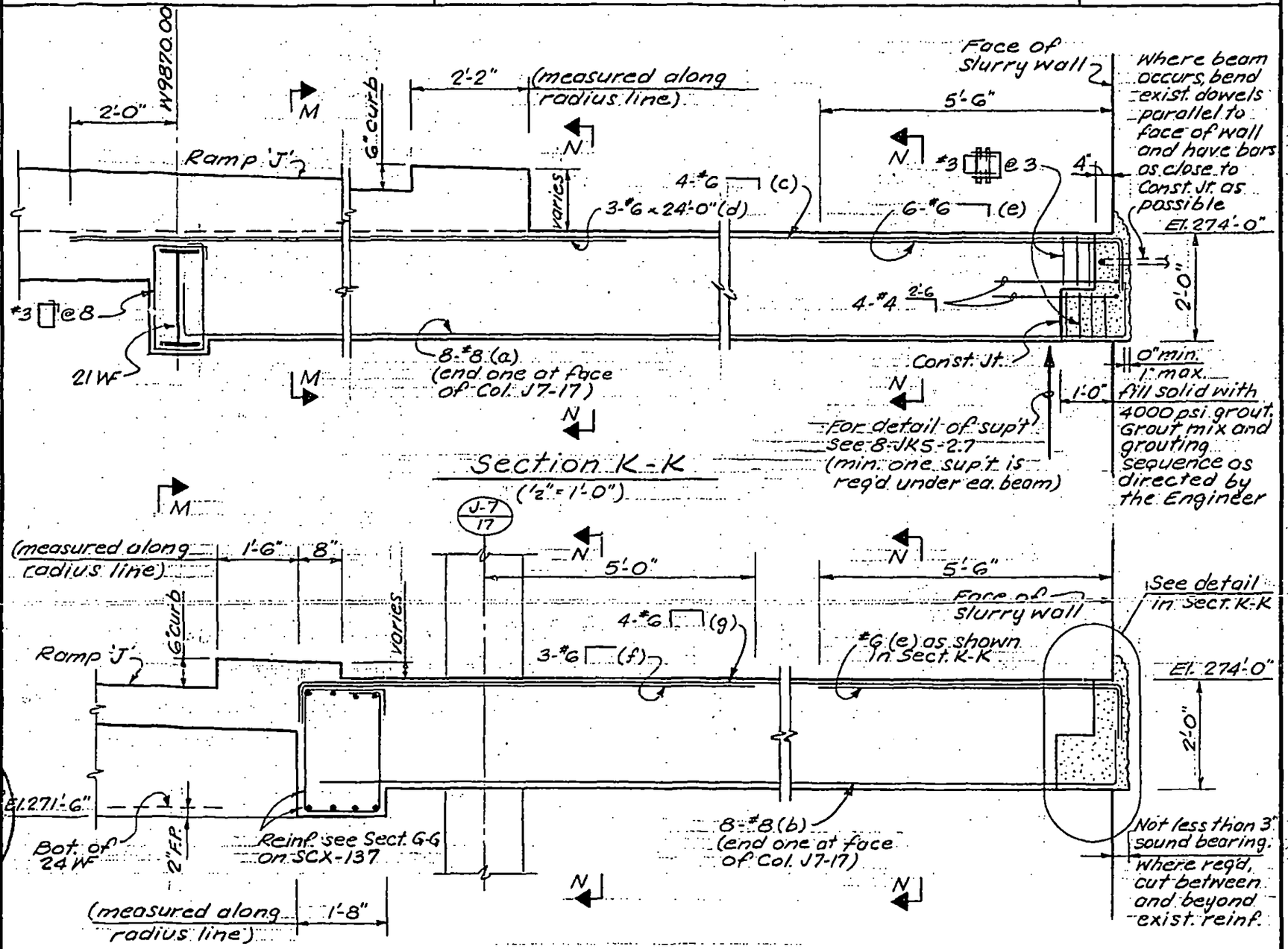

LICENSED PROFESSIONAL ENGINEER — LESLIE E. ROBERTSON — No. 34360 — UNIVERSITY OF THE STATE OF NEW YORK

DESIGNED

DRAWN S.C.

REVIEWED E.L.

8-JK8-51.7

SKILLING, HELLE, CHRISTIANSEN, ROBERTSON — Structural & Civil Engineers

PROJECT: THE WORLD TRADE CENTER | TITLE: SECTIONS AT EL. 274'-0" | DATE: 7-14-69

REVISIONS

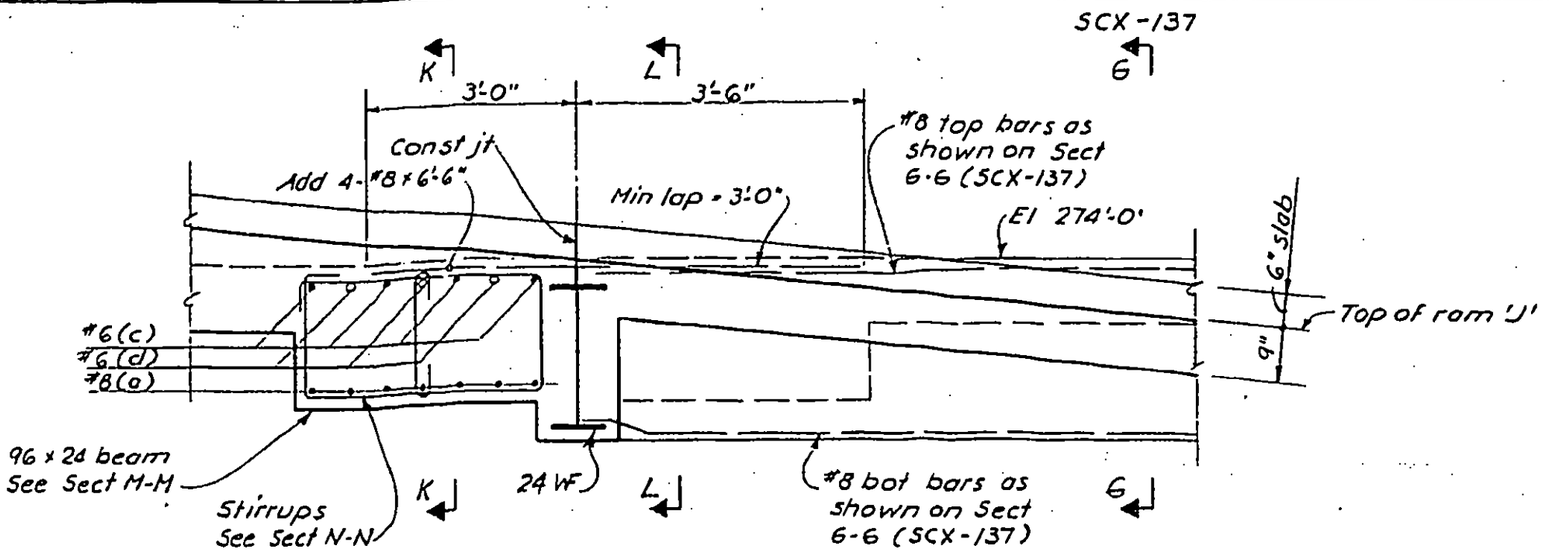

Section M-M
(½" = 1'-0")

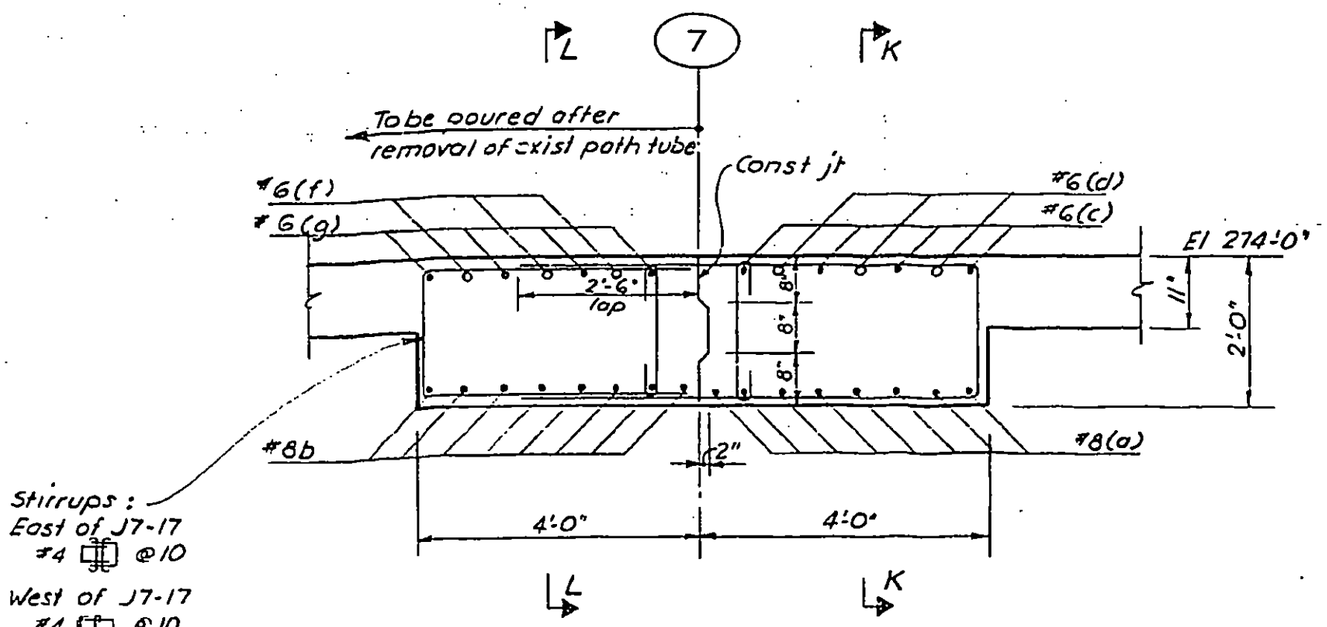

Section N-N
(½" = 1'-0")

LICENSED PROFESSIONAL ENGINEER — LESLIE E. ROBERTSON — No. 34360 — UNIVERSITY OF THE STATE OF NEW YORK

DESIGNED /
DRAWN E. Smith
REVIEWED E.L.

8-JK8-51.8

SKILLING, HELLE, CHRISTIANSEN, ROBERTSON — Structural & Civil Engineers

PROJECT THE WORLD TRADE CENTER | TITLE SECTIONS AT EL. 274'-0" | DATE 8-25-69

REVISIONS

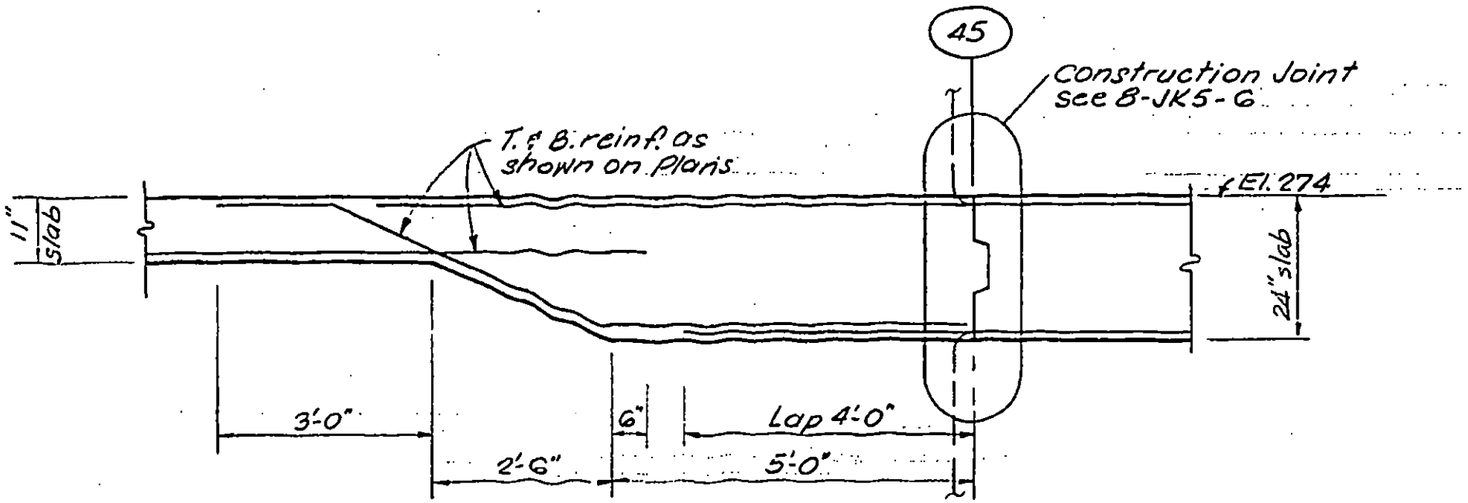

Section P-P
(½" = 1'-0")

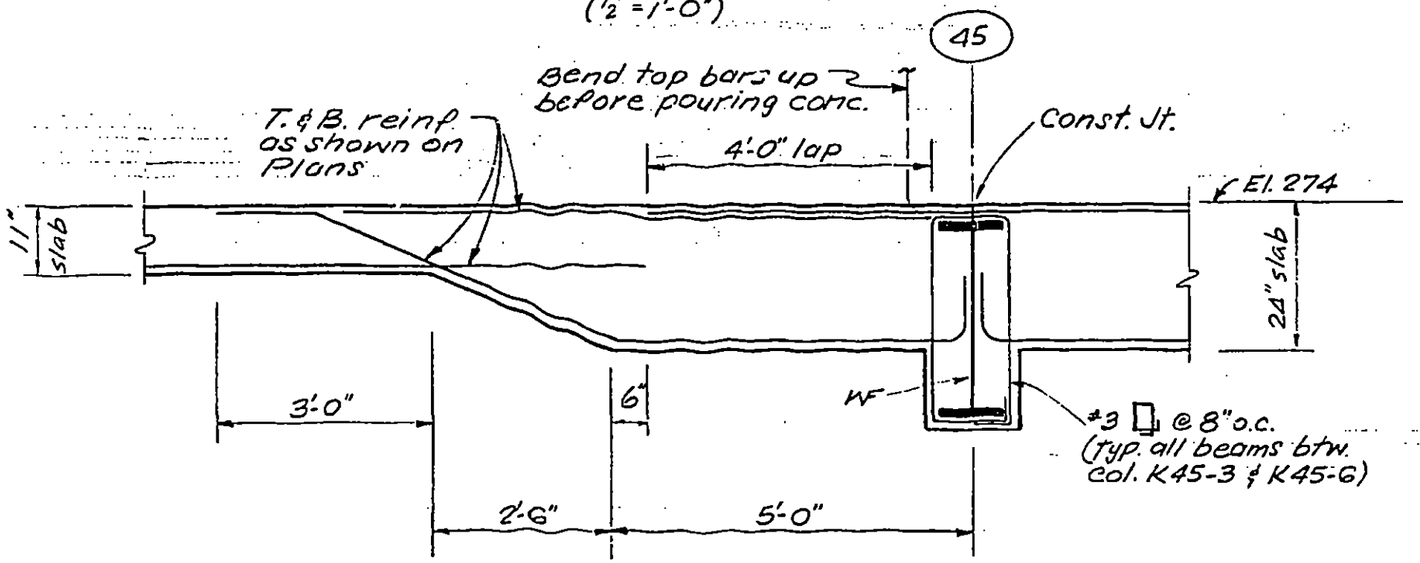

Section Q-Q
(½" = 1'-0")

LICENSED PROFESSIONAL ENGINEER
LESLIE E. ROBERTSON
No. 34360
UNIVERSITY OF THE STATE OF NEW YORK

DESIGNED

DRAWN S.C.

REVIEWED E.L.

8-JK8-51.9

SKILLING, HELLE, CHRISTIANSEN, ROBERTSON — Structural & Civil Engineers

PROJECT THE WORLD TRADE CENTER | TITLE SECTIONS AT EL. 274'-0" | DATE 8-25-69

REVISIONS

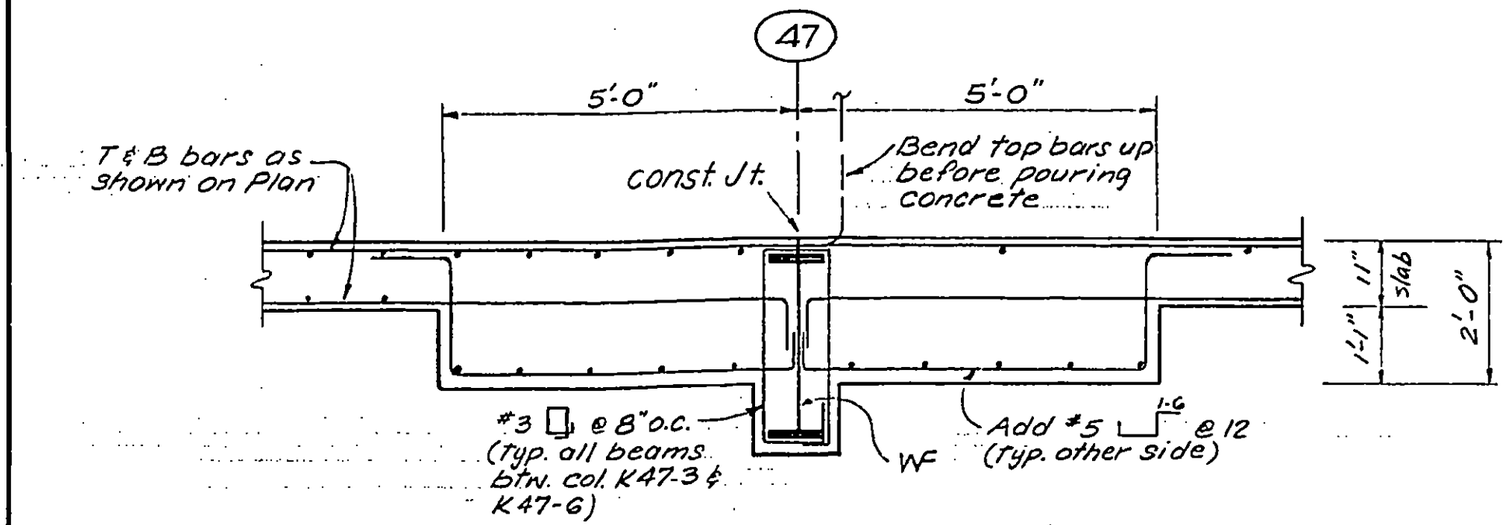

Section R-R
(½" = 1'-0")

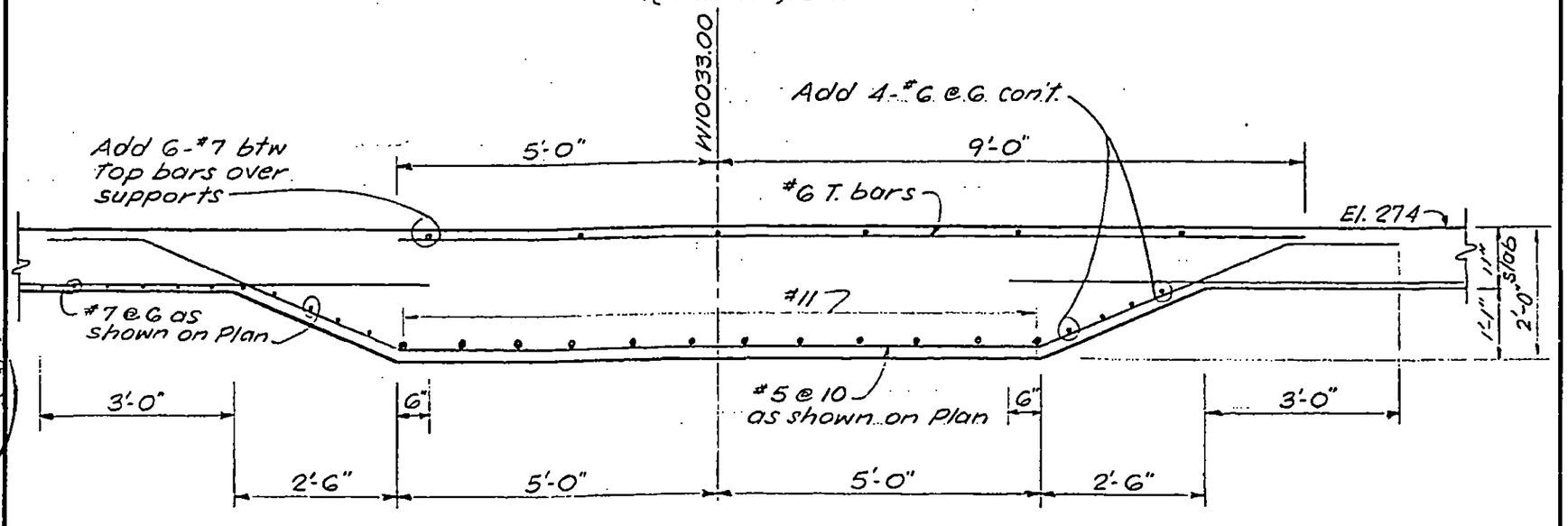

Section S-S
(½" = 1'-0")

LICENSED PROFESSIONAL ENGINEER — LESLIE E. ROBERTSON — No. 34360 — UNIVERSITY OF THE STATE OF NEW YORK

DESIGNED

DRAWN S.C.

REVIEWED E.L.

8-JK8-51.10

SKILLING, HELLE, CHRISTIANSEN, ROBERTSON — Structural & Civil Engineers

PROJECT: THE WORLD TRADE CENTER | TITLE: SECTIONS AT EL. 274'-0" | DATE: 8-25-69

REVISIONS

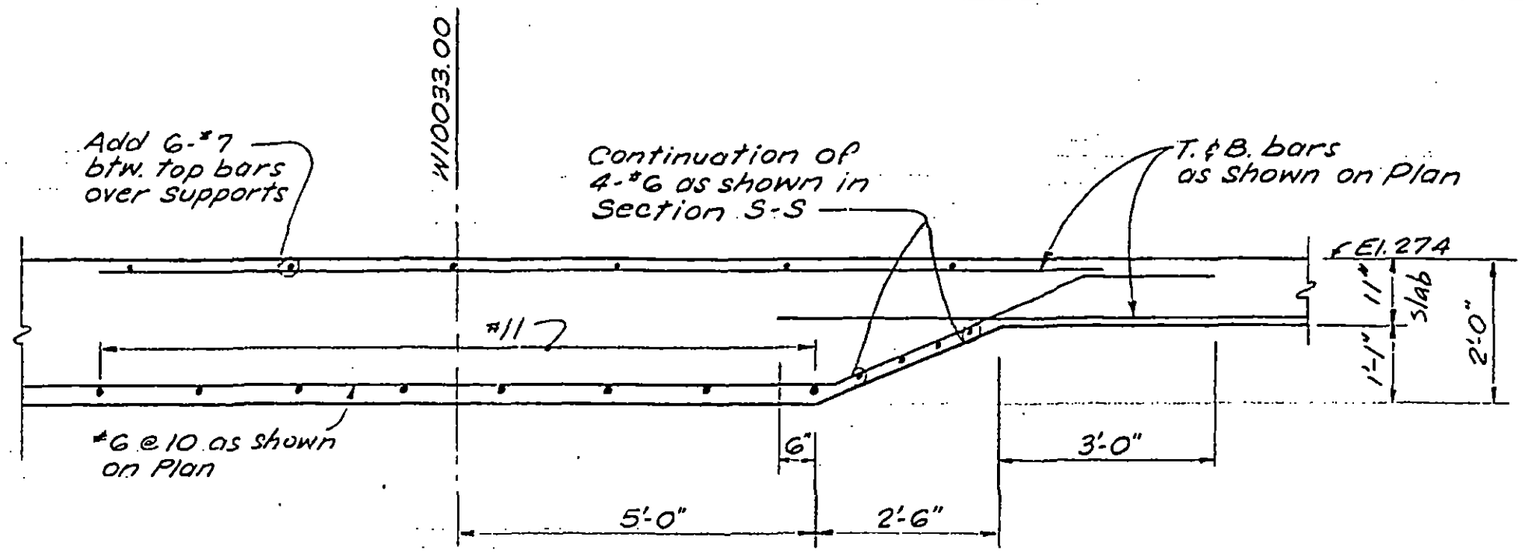

Section T-T
(½" = 1'-0")

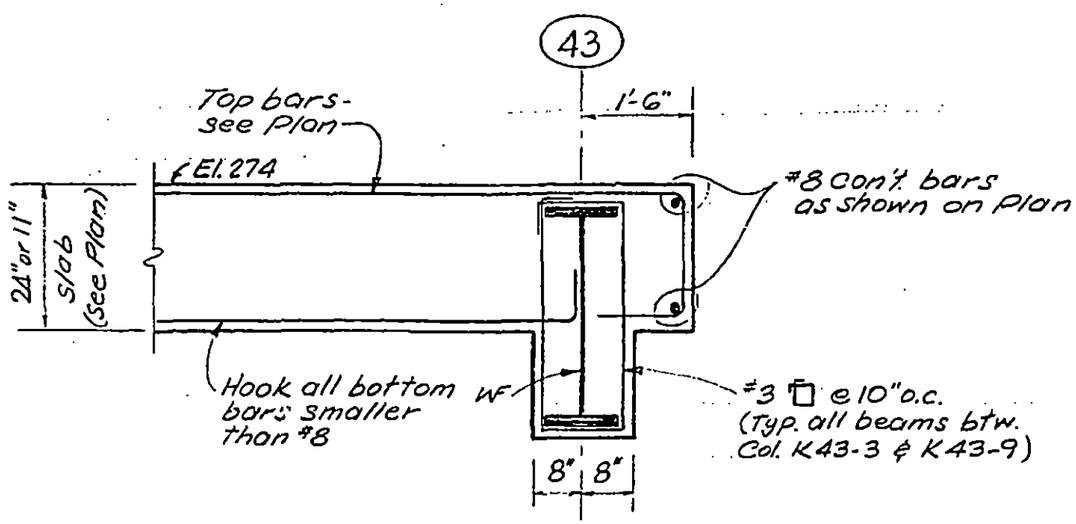

Section U-U
(½" = 1'-0")

LICENSED PROFESSIONAL ENGINEER — LESLIE E. ROBERTSON — No. 34360 — UNIVERSITY OF THE STATE OF NEW YORK

DESIGNED

DRAWN S.C.

REVIEWED E.L.

8-JK8-51.11

SKILLING, HELLE, CHRISTIANSEN, ROBERTSON — Structural & Civil Engineers

PROJECT THE WORLD TRADE CENTER | TITLE SECTIONS AT EL. 274'-0" | DATE 9-12-69

REVISIONS

9-18-72

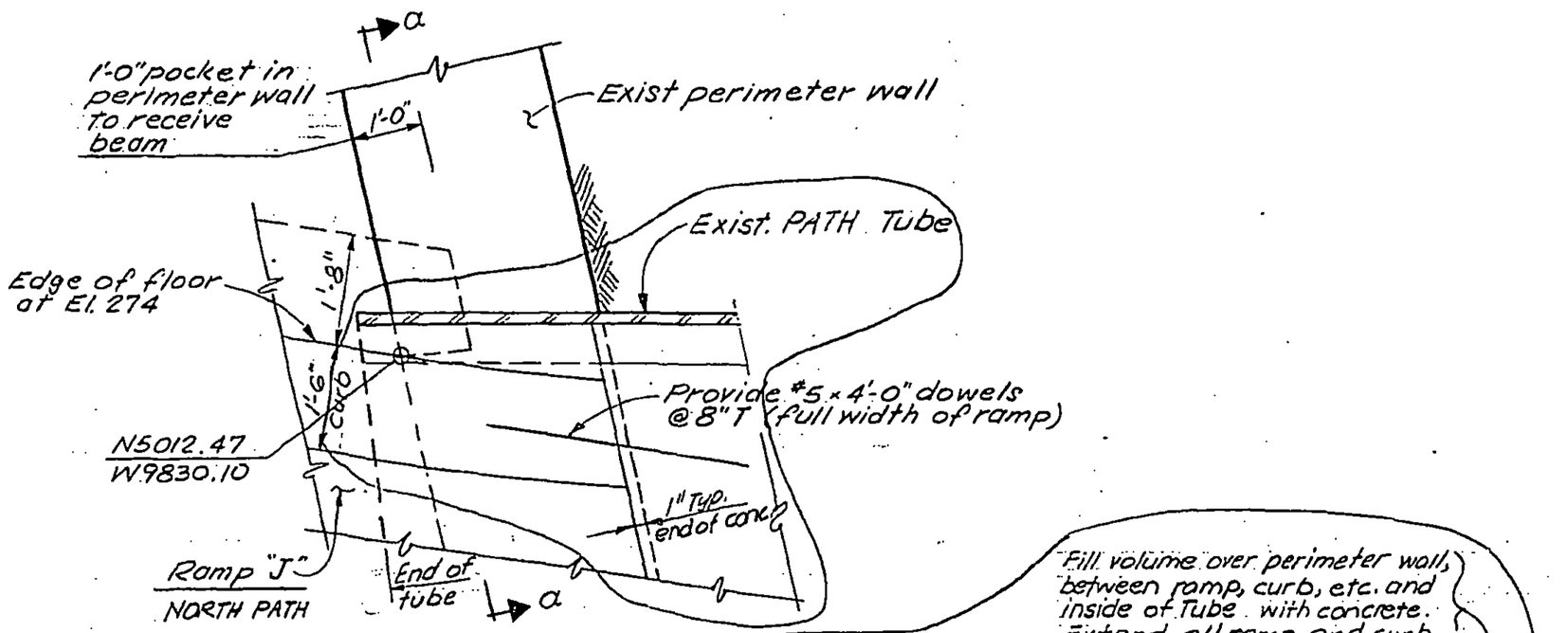

Section V-V
(½" = 1'-0")

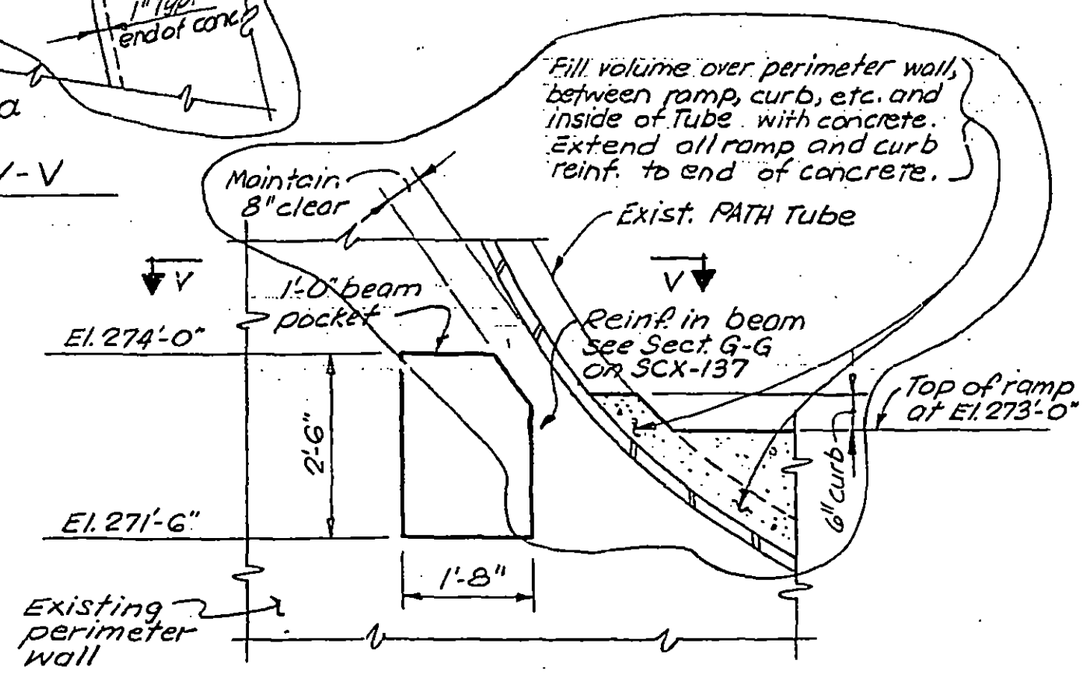

Section a-a
(½" = 1'-0")

LICENSED PROFESSIONAL ENGINEER
LESLIE E. ROBERTSON
No. 34360
UNIVERSITY OF THE STATE OF NEW YORK

DESIGNED

DRAWN S.C.

REVIEWED E.L.

8-JK8-51.12

SKILLING, HELLE, CHRISTIANSEN, ROBERTSON — Structural & Civil Engineers

PROJECT THE WORLD TRADE CENTER | TITLE SECTIONS AT EL. 274'-0" | DATE 9-12-69

REVISIONS

9-18-72

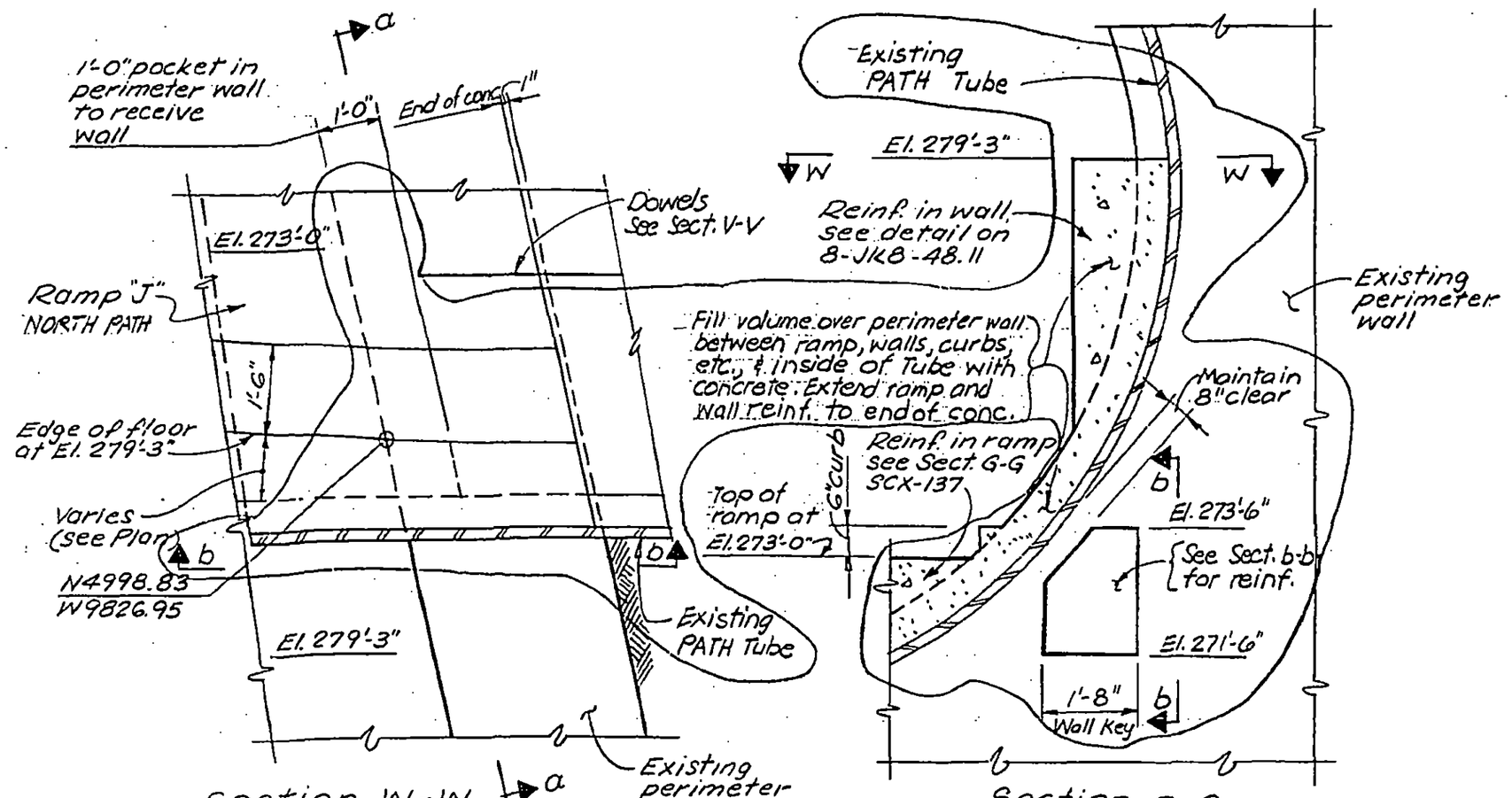

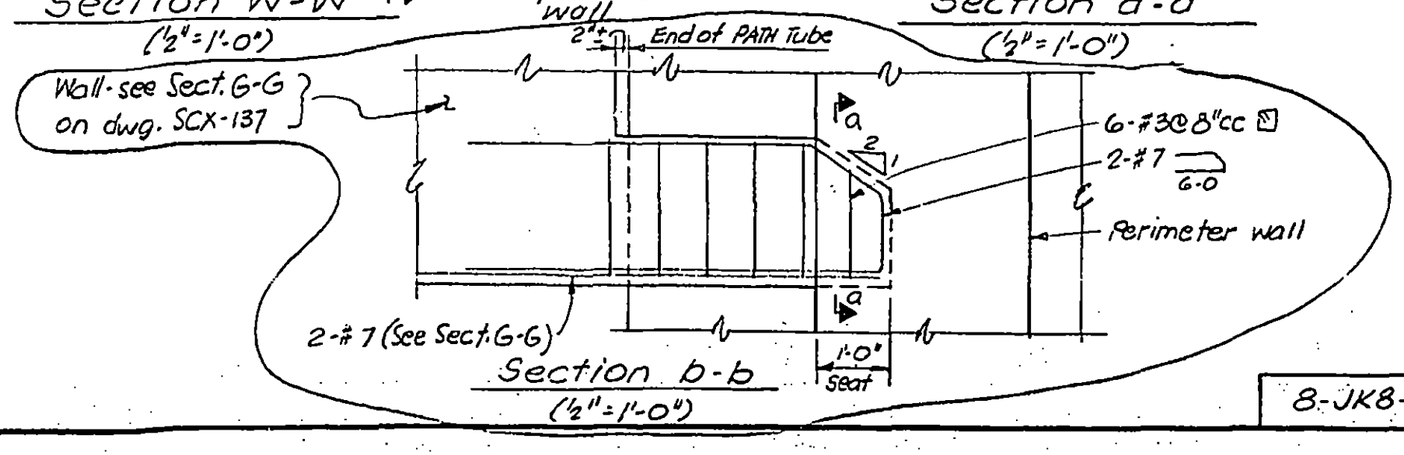

8-JK8-51.13

LICENSED PROFESSIONAL ENGINEER — LESLIE E. ROBERTSON — No. 34360 — UNIVERSITY OF THE STATE OF NEW YORK

DESIGNED

DRAWN S.C.

REVIEWED E.L.

SKILLING, HELLE, CHRISTIANSEN, ROBERTSON — Structural & Civil Engineers

PROJECT THE WORLD TRADE CENTER | TITLE PUMP PLATFORM ANCHOR BOLT DETAILS | DATE 4-29-69

REVISIONS

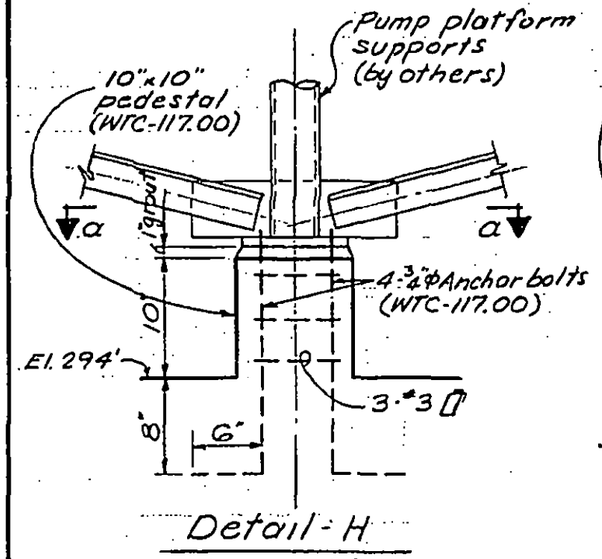

Detail - H
(SCJ-79)

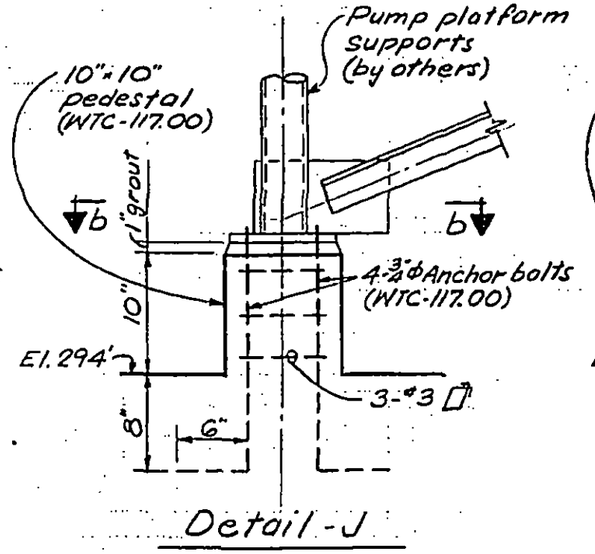

Detail - J
(SCJ-79)

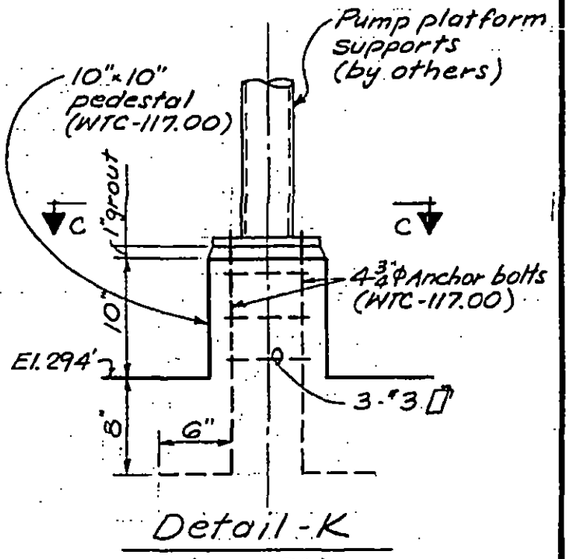

Detail - K
(SCJ-79)

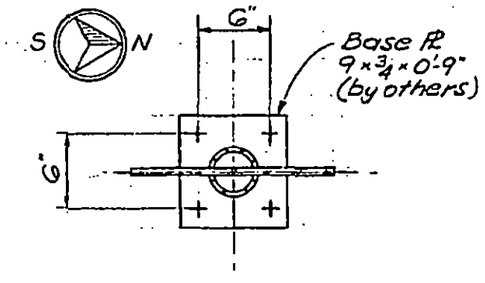

Section a-a

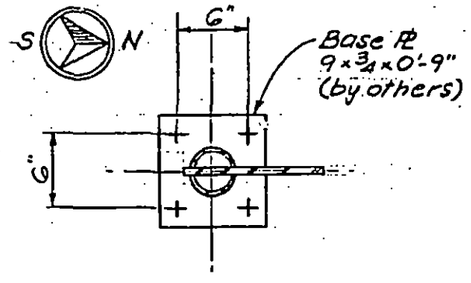

Section b-b

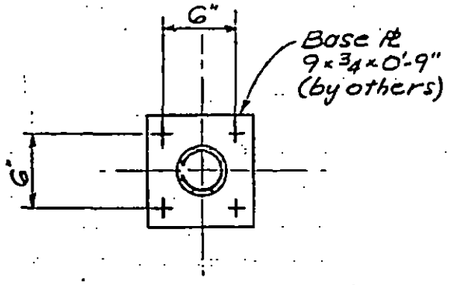

Section c-c

Notes:
1. Contractor to provide and install all 3/4"Φ A. bolts with proper nuts & spring washers at top.
2. Contractor to coordinate with Archit. dwgs & Platform shop dwgs for exact locations of A. bolts.

LICENSED PROFESSIONAL ENGINEER LESLIE E. ROBERTSON No. 34980 UNIVERSITY OF THE STATE OF NEW YORK

DESIGNED

DRAWN S.C.

REVIEWED E.L.

8-JK8-52.1

SKILLING, HELLE, CHRISTIANSEN, ROBERTSON — Structural & Civil Engineers

PROJECT: THE WORLD TRADE CENTER | TITLE: SECTIONS AT EL. 310'-0" | DATE: 5-5-69

REVISIONS

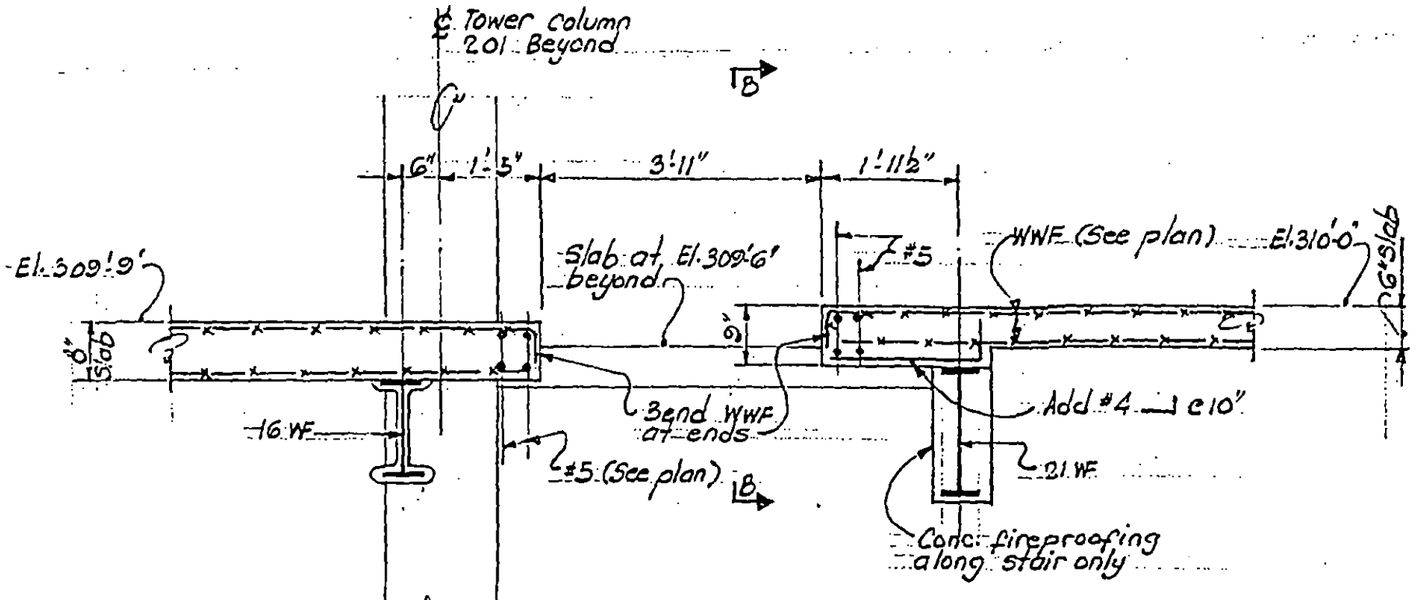

Section A-A
(½" = 1'-0")

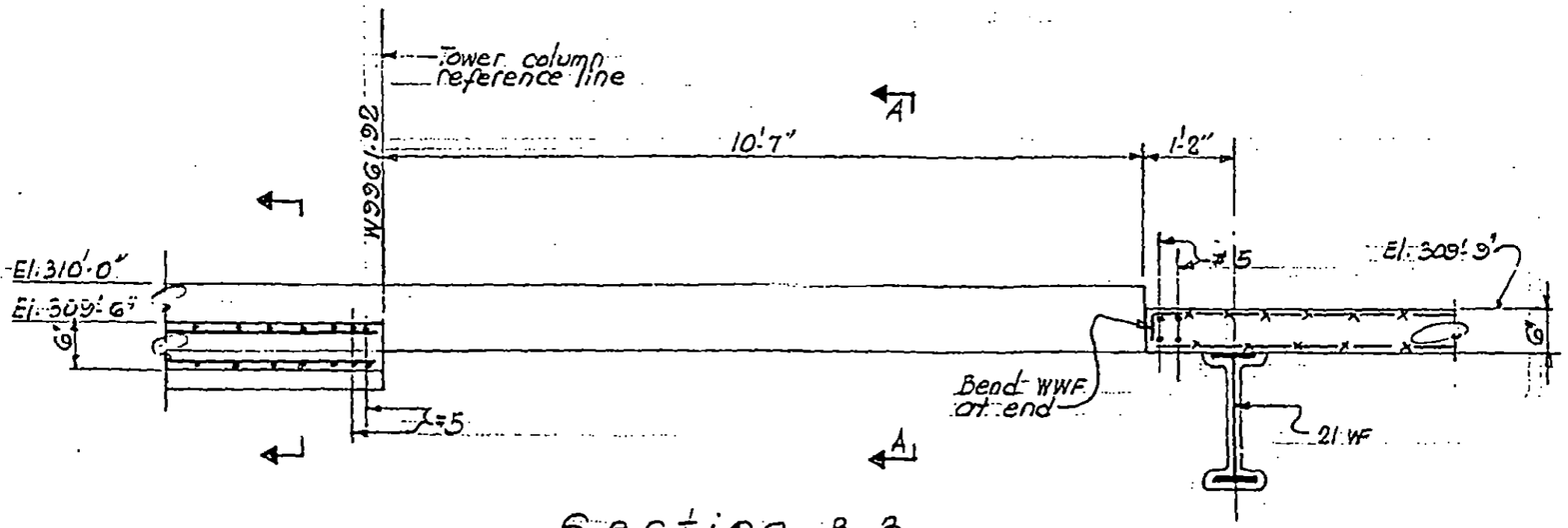

Section B-B

LICENSED PROFESSIONAL ENGINEER — LESLIE E. ROBERTSON — No. 34360 — UNIVERSITY OF THE STATE OF NEW YORK

DESIGNED

DRAWN: S.T.M.

REVIEWED: E.L.

SKILLING, HELLE, CHRISTIANSEN, ROBERTSON — Structural & Civil Engineers

PROJECT: THE WORLD TRADE CENTER | TITLE: SECTIONS AT EL. 310'0" | DATE: 5-5-69

REVISIONS

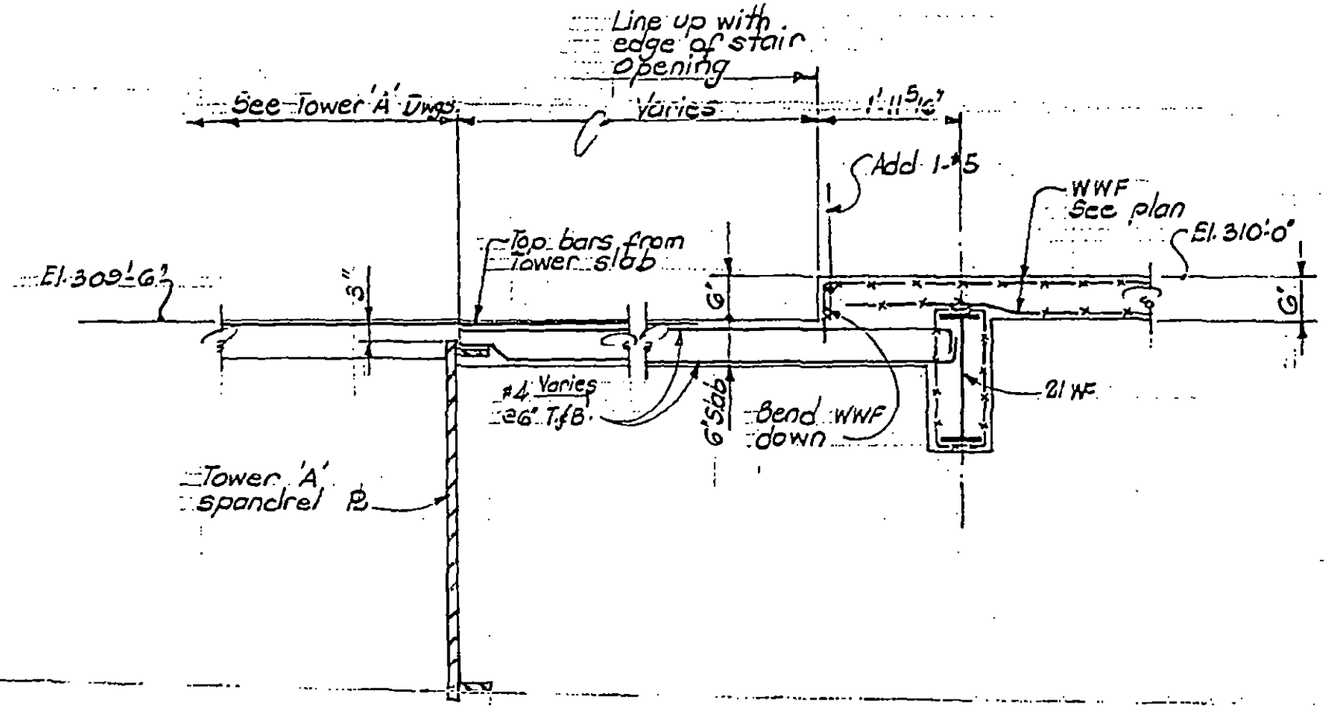

Section C-C
(½" = 1'-0")

LICENSED PROFESSIONAL ENGINEER
LESLIE E. ROBERTSON
No. 34360
UNIVERSITY OF THE STATE OF NEW YORK

DESIGNED

DRAWN S.T.M.

REVIEWED

8-JK8-54.2

SKILLING, HELLE, CHRISTIANSEN, ROBERTSON Structural & Civil Engineers

PROJECT THE WORLD TRADE CENTER | TITLE SECTIONS AT EL. 310'-0" | DATE 5-5-69

REVISIONS

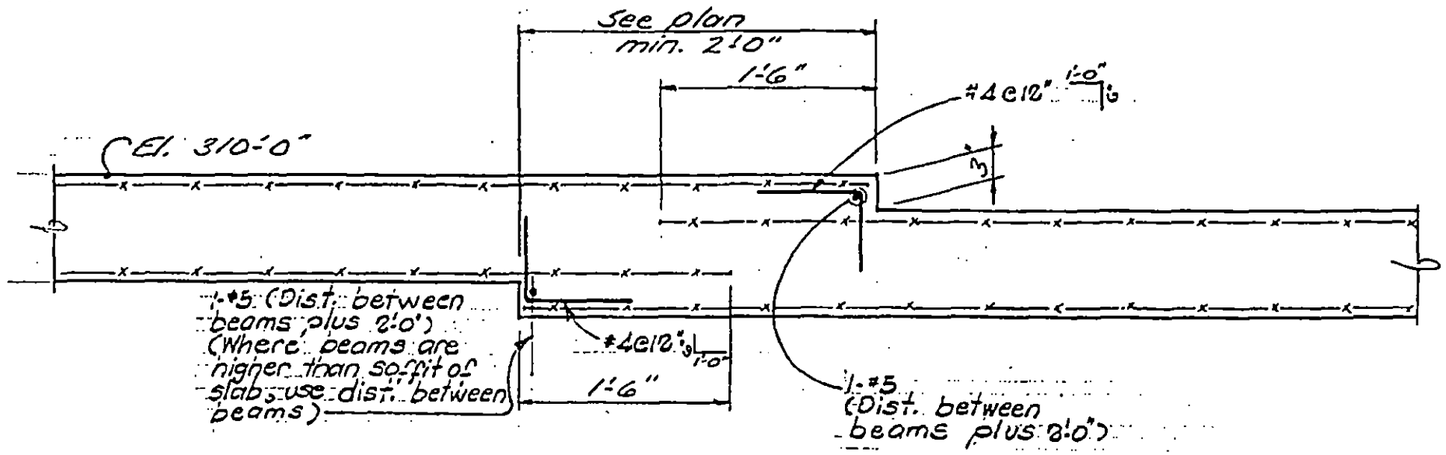

Section D-D

LICENSED PROFESSIONAL ENGINEER
LESLIE E. ROBERTSON
No. 34360
UNIVERSITY OF THE STATE OF NEW YORK

DESIGNED

DRAWN S.C.

REVIEWED E.L.

8-JK8-54.3

SKILLING, HELLE, CHRISTIANSEN, ROBERTSON — Structural & Civil Engineers

PROJECT THE WORLD TRADE CENTER | TITLE SECTIONS AT El. 310'-0" | DATE 5-5-69

REVISIONS

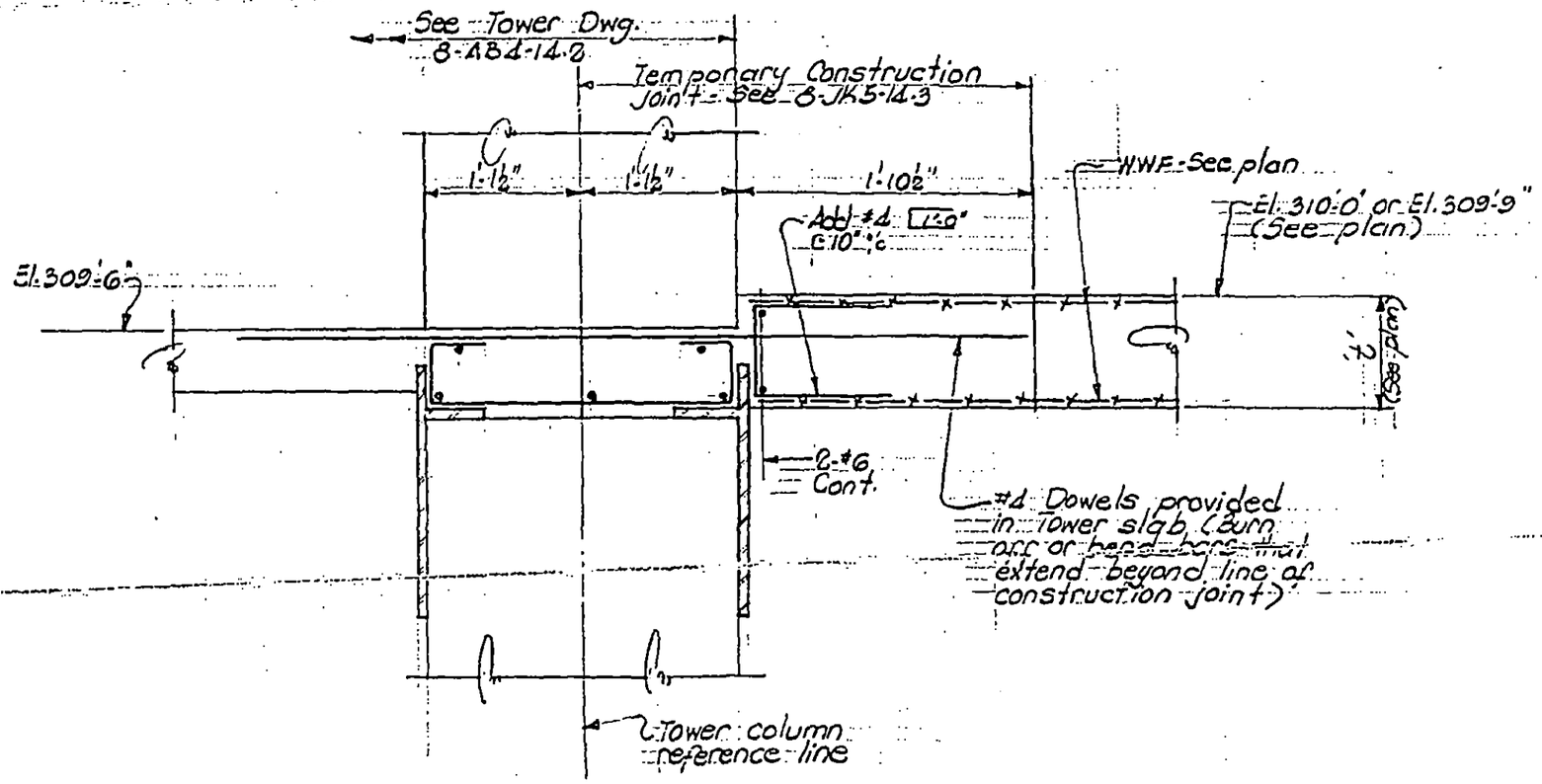

Section E-E

LICENSED PROFESSIONAL ENGINEER — LESLIE E. ROBERTSON — No. 34360 — UNIVERSITY OF THE STATE OF NEW YORK

DESIGNED

DRAWN S.T.M.

REVIEWED E.L.

8-JK8-54.4

SKILLING, HELLE, CHRISTIANSEN, ROBERTSON — Structural & Civil Engineers

PROJECT: THE WORLD TRADE CENTER | TITLE: SECTIONS AT EL 310'-0" | DATE: 6-11-69

REVISIONS

7-16-69

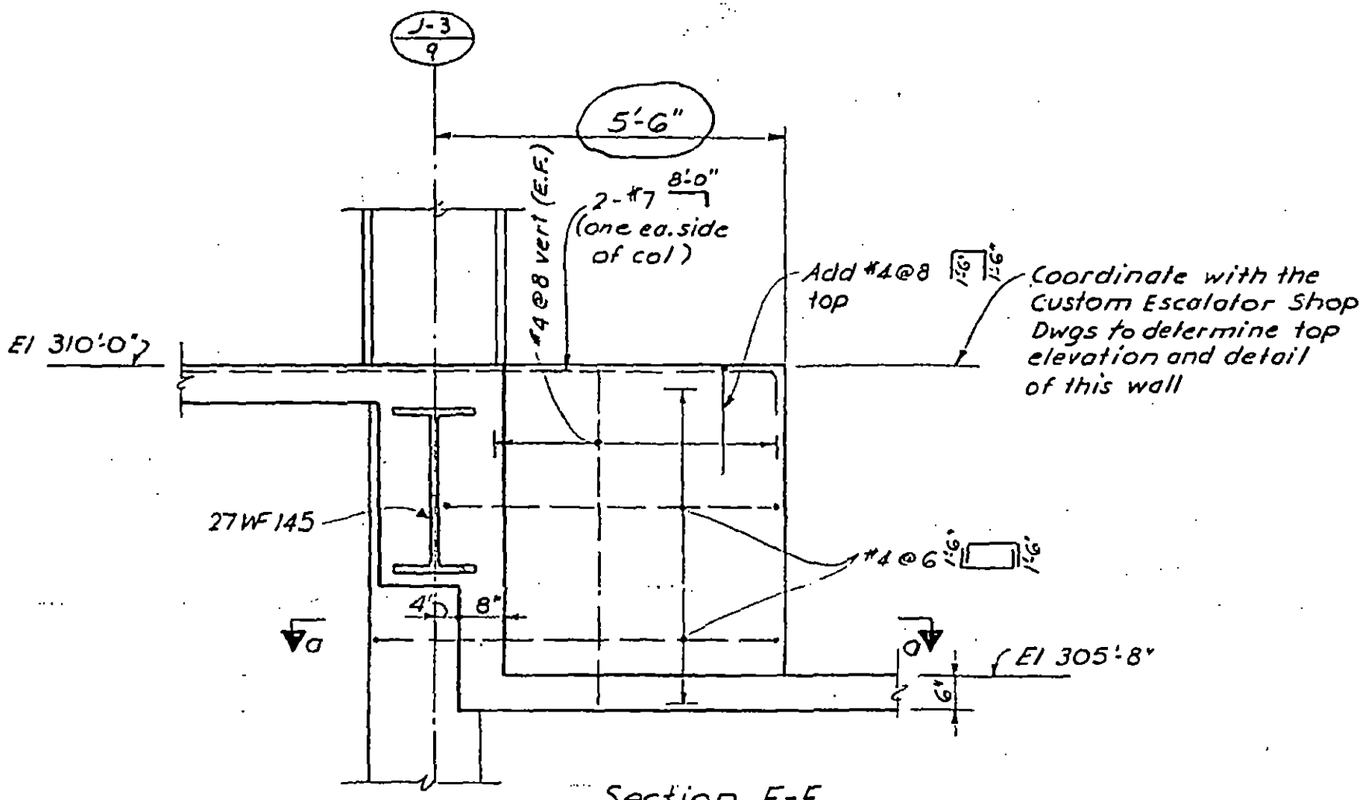

Section F-F
(½"=1'-0")

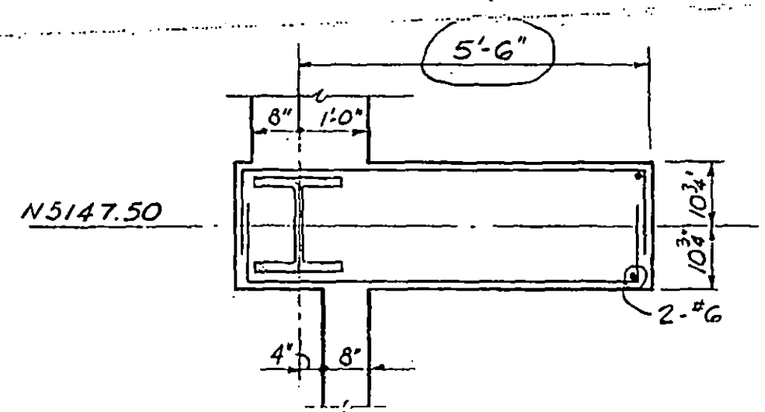

Section a-a

LICENSED PROFESSIONAL ENGINEER — LESLIE E. ROBERTSON — No. 34360 — UNIVERSITY OF THE STATE OF NEW YORK

DESIGNED

DRAWN: F. Smith

REVIEWED: F.L.

8-JK8-54.5

SKILLING, HELLE, CHRISTIANSEN, ROBERTSON — Structural & Civil Engineers

PROJECT THE WORLD TRADE CENTER | TITLE SECTIONS AT EL 310'-0" | DATE 6-11-69

REVISIONS

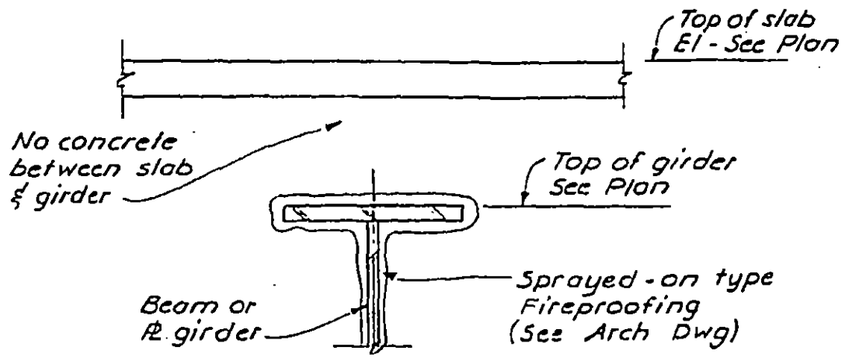

Section 6-6

(No scale)

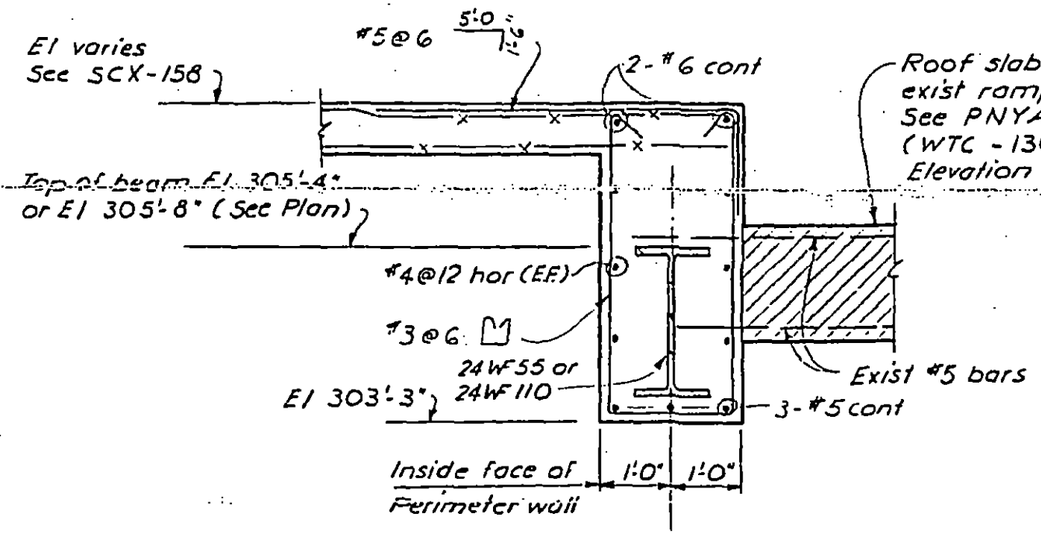

Section H-H

(½" = 1'-0")

LICENSED PROFESSIONAL ENGINEER
LESLIE E. ROBERTSON
No. 34360
UNIVERSITY OF THE STATE OF NEW YORK

DESIGNED

DRAWN F. Smith

REVIEWED E.L.

8-JK8-54.6

SKILLING, HELLE, CHRISTIANSEN, ROBERTSON — Structural & Civil Engineers

PROJECT THE WORLD TRADE CENTER | TITLE SECTIONS AT EL. 310'-0" | DATE 10-1-69

REVISIONS

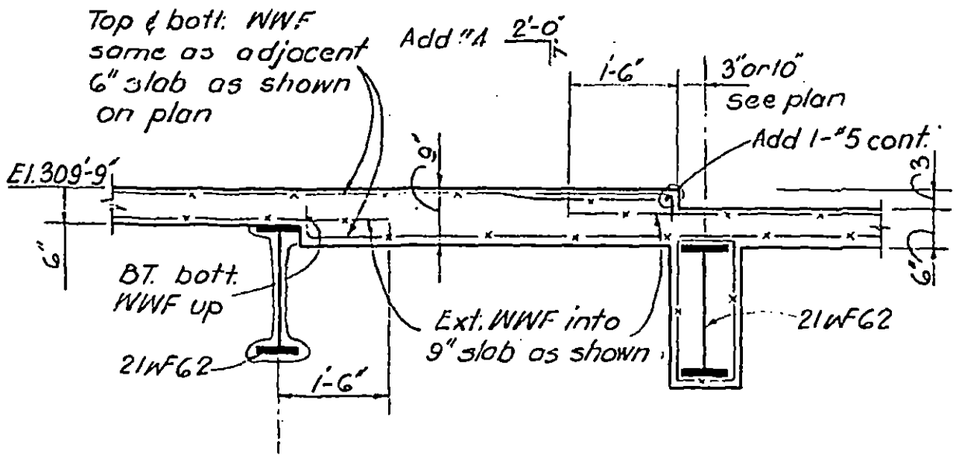

SECTION J-J
(½"=1'-0")

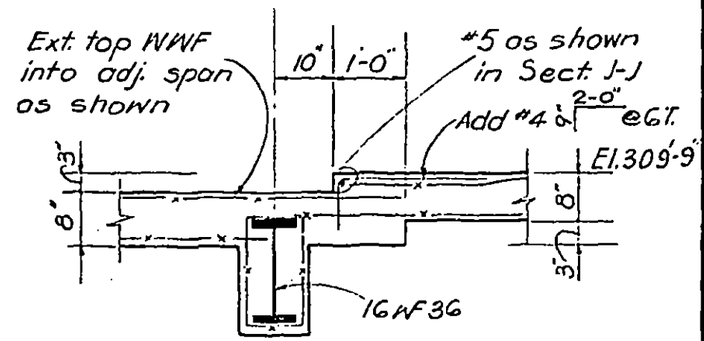

SECTION K-K
(½"=1'-0")

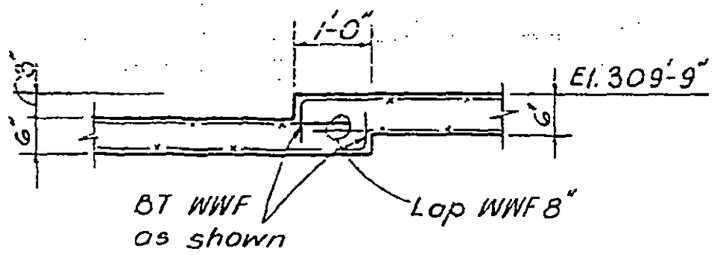

SECTION L-L
(½"=1'-0")

LICENSED PROFESSIONAL ENGINEER — LESLIE E. ROBERTSON — No. 34960 — STATE OF NEW YORK

DESIGNED

DRAWN D.U.

REVIEWED E.L.

8-JK8-54.7

SKILLING, HELLE, CHRISTIANSEN, ROBERTSON — Structural & Civil Engineers

PROJECT THE WORLD TRADE CENTER | TITLE SECTION AT EL. 310'-0" | DATE 11-5-69

REVISIONS

11-25-69

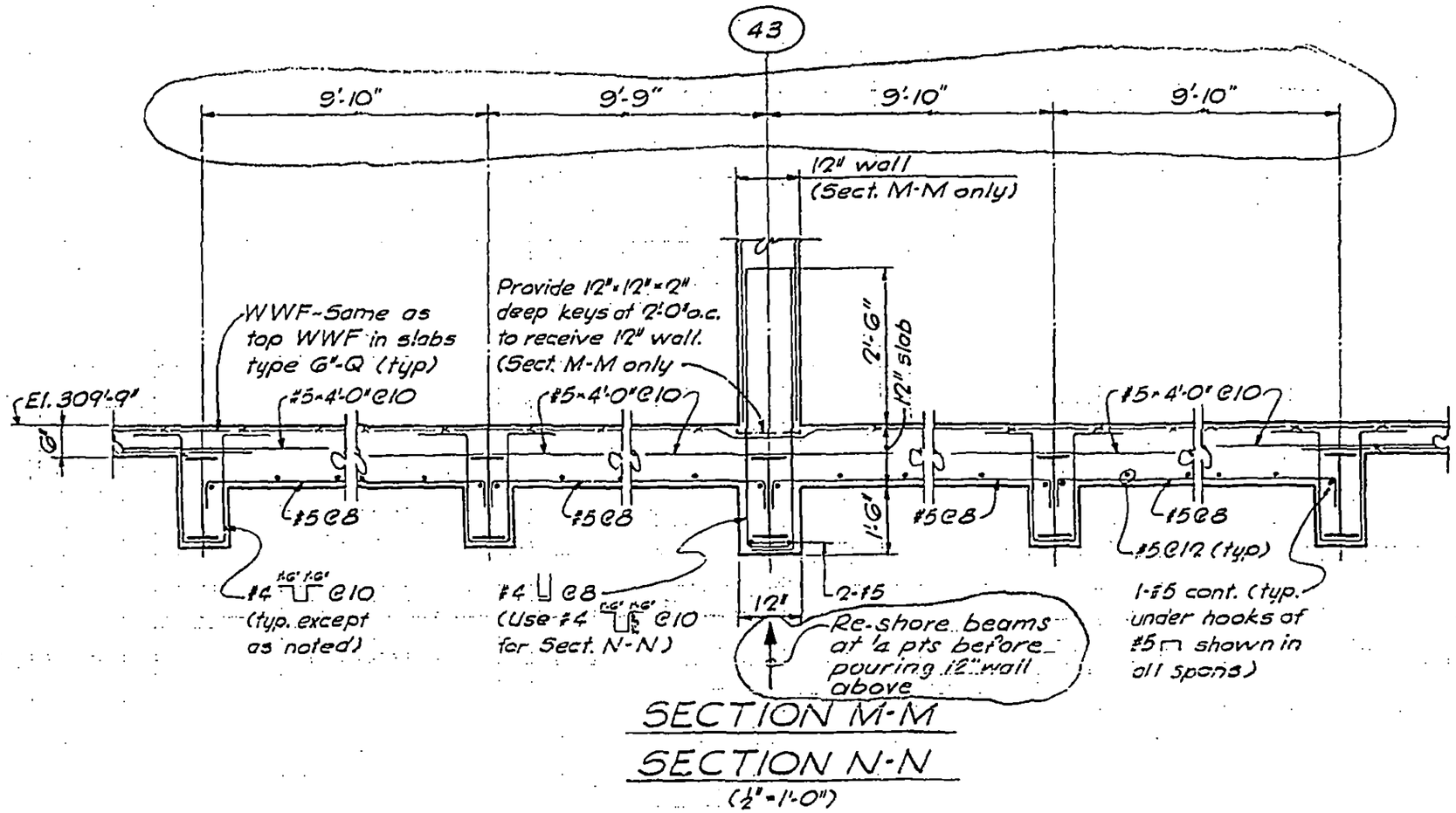

SECTION M-M

SECTION N-N

(½"=1'-0")

LICENSED PROFESSIONAL ENGINEER
LESLIE E. ROBERTSON
No 34360
UNIVERSITY OF THE STATE OF NEW YORK

DESIGNED E.L.

DRAWN G.K.

REVIEWED

8-JK8-54.8

SKILLING, HELLE, CHRISTIANSEN, ROBERTSON — Structural & Civil Engineers

PROJECT THE WORLD TRADE CENTER | TITLE SECTION AT EL. 310'-0" | DATE 2-9-70

REVISIONS

6-12-72

6-22-72

6-15-73

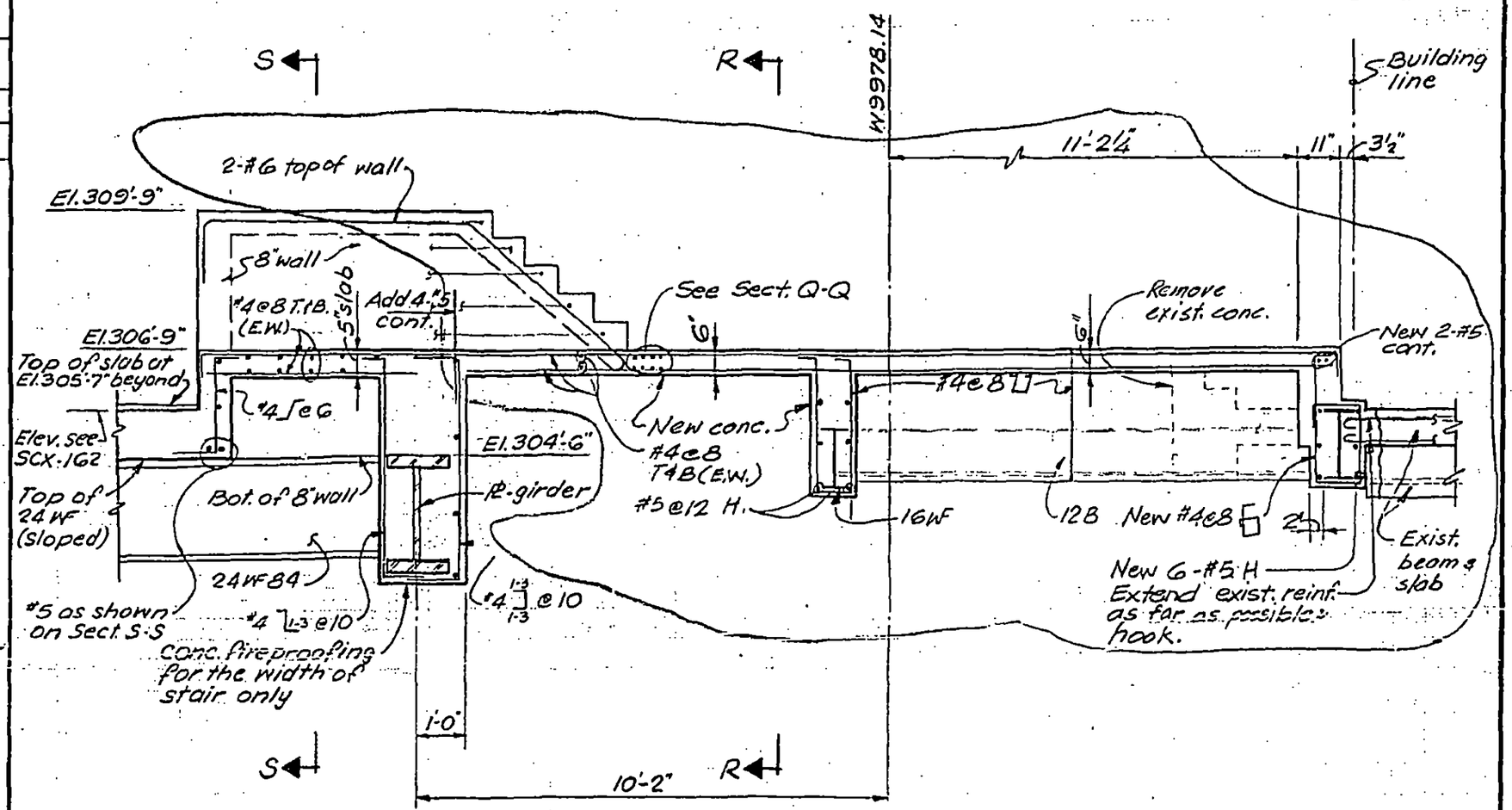

SECTION P-P

(3/8" = 1'-0")

DESIGNED

DRAWN S.C.

REVIEWED E.L.

8-JK8-54.9

SKILLING, HELLE, CHRISTIANSEN, ROBERTSON — Structural & Civil Engineers

PROJECT THE WORLD TRADE CENTER | TITLE SECTION AT EL. 310'-0" | DATE 2-9-70

REVISIONS
4-3-70
6-12-72
6-22-72
6-15-73

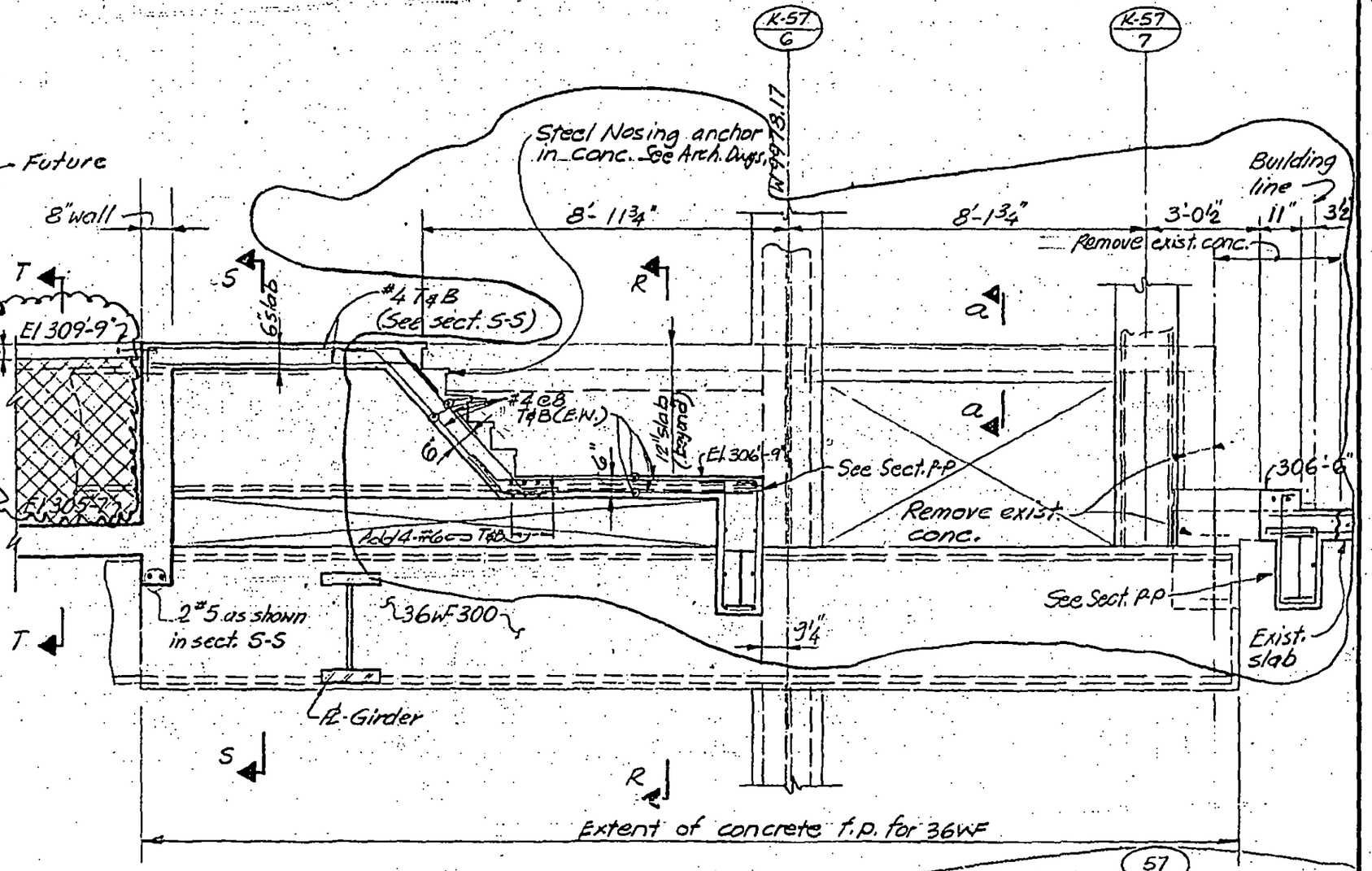

SECTION Q-Q
(⅝"=1'-0")

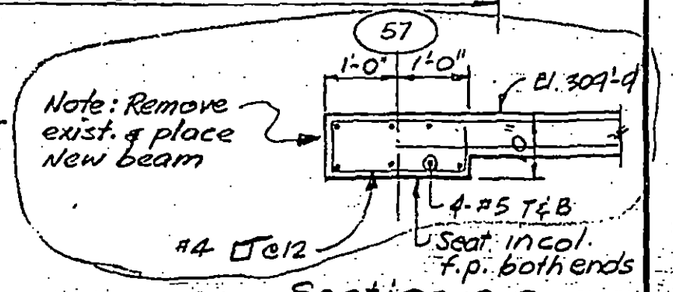

Section a-a
(½"=1'0")

8-JK8-54.10

LICENSED PROFESSIONAL ENGINEER
LESLIE E. ROBERTSON
No. 34360
UNIVERSITY OF THE STATE OF NEW YORK

DESIGNED
DRAWN J. Gricius
REVIEWED E.L.

SKILLING, HELLE, CHRISTIANSEN, ROBERTSON — Structural & Civil Engineers

PROJECT THE WORLD TRADE CENTER | TITLE SECTIONS AT STAIR K-6A, EL 310 | DATE 2-9-70

REVISIONS

6-12-72

6-22-72

6-15-73

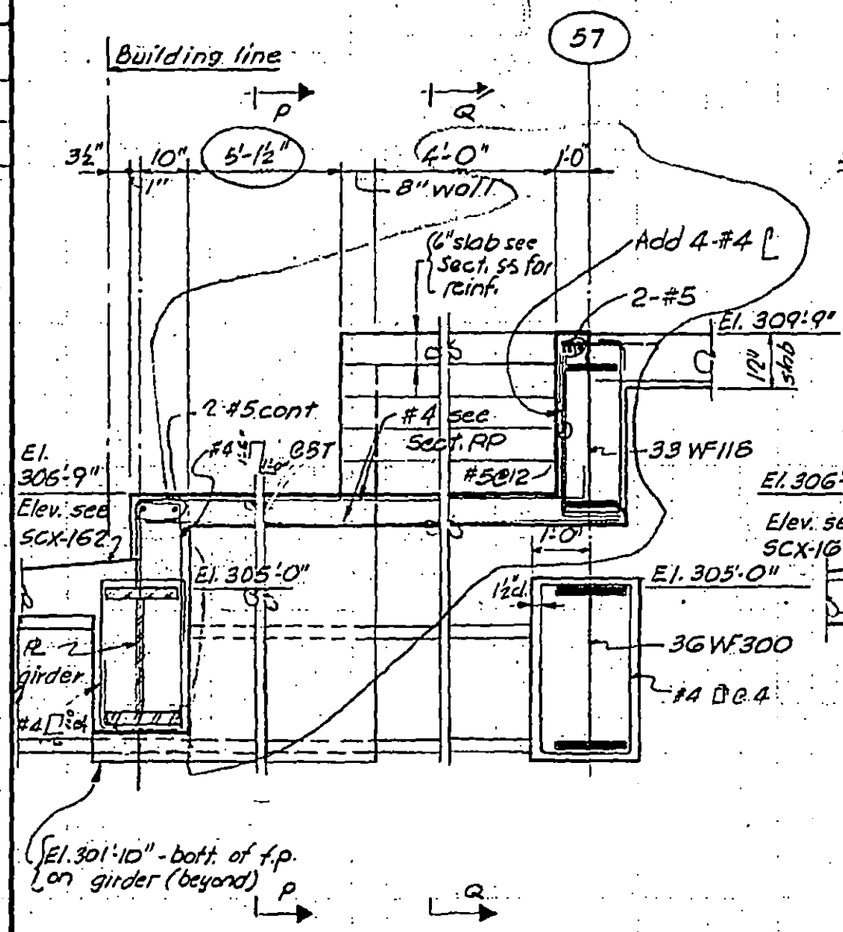

SECTION R-R

(3/8" = 1'-0")

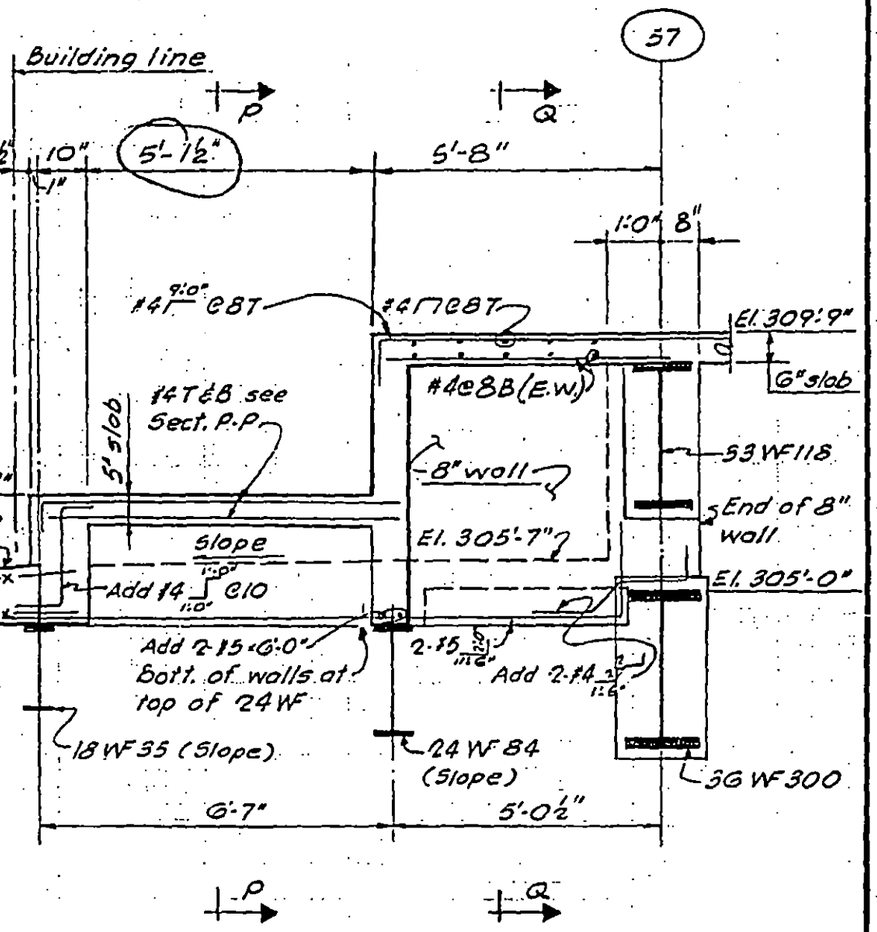

SECTION S-S

(3/8" = 1'-0")

LICENSED PROFESSIONAL ENGINEER — LESLIE E. ROBERTSON — No. 34360 — UNIVERSITY OF THE STATE OF NEW YORK

DESIGNED

DRAWN GK

REVIEWED EL

8-JK8-54.11

SKILLING, HELLE, CHRISTIANSEN, ROBERTSON — Structural & Civil Engineers

PROJECT THE WORLD TRADE CENTER | TITLE SECTIONS AT EL. 310'-0" | DATE 2-9-70

REVISIONS

6-15-73

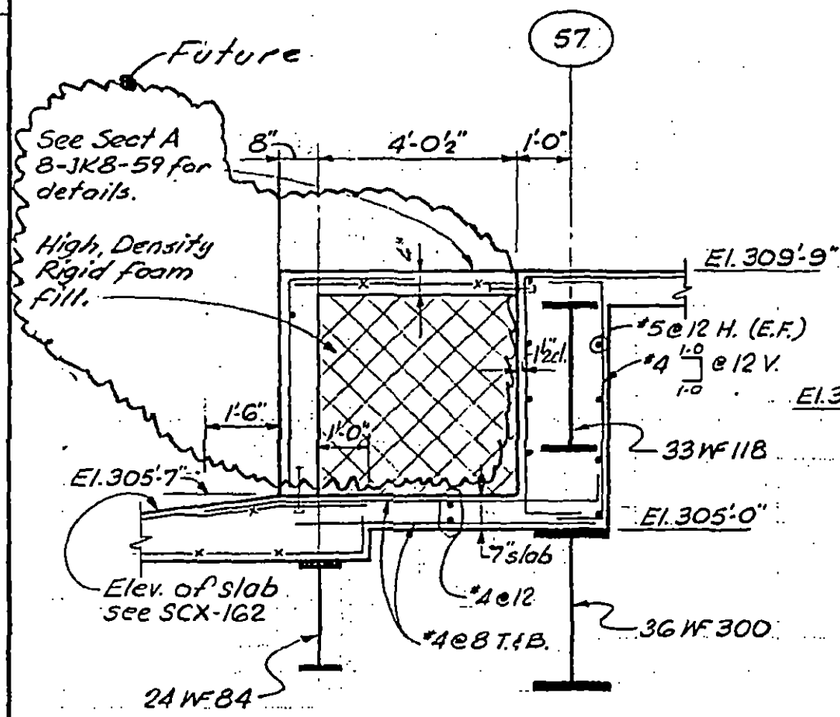

Section T-T

(⅜" = 1'-0")

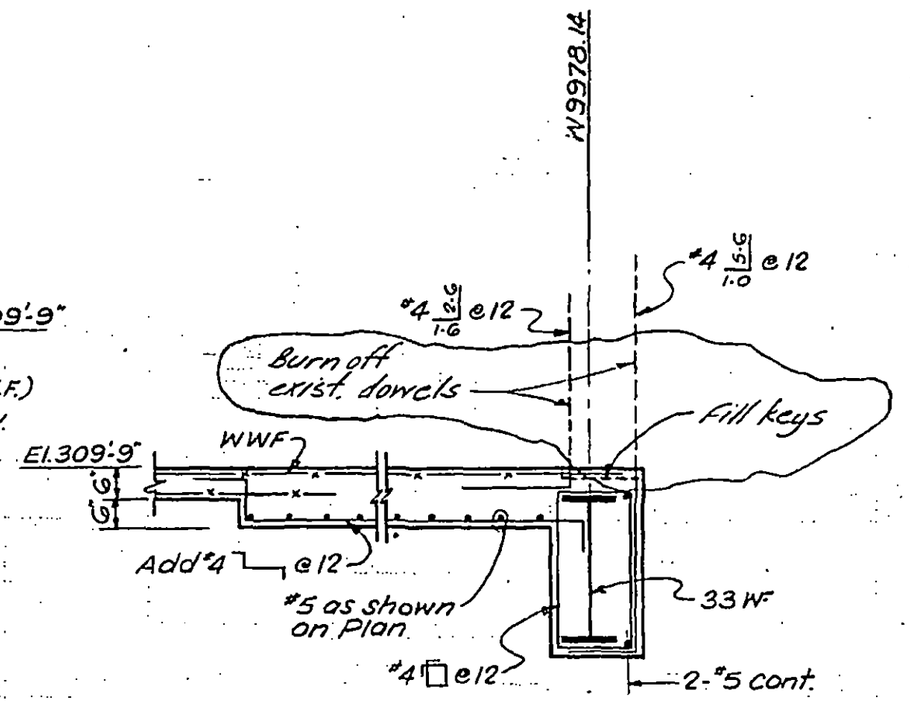

Section U-U

(⅜" = 1'-0")

LICENSED PROFESSIONAL ENGINEER — LESLIE E. ROBERTSON — No. 34360 — UNIVERSITY OF THE STATE OF NEW YORK

DESIGNED

DRAWN S.C.

REVIEWED E.L.

8-JK8-54.12

SKILLING, HELLE, CHRISTIANSEN, ROBERTSON — Structural & Civil Engineers

PROJECT THE WORLD TRADE CENTER | TITLE SECTIONS AT EL. 310'-0" | DATE 2-9-70

REVISIONS

6-15-73

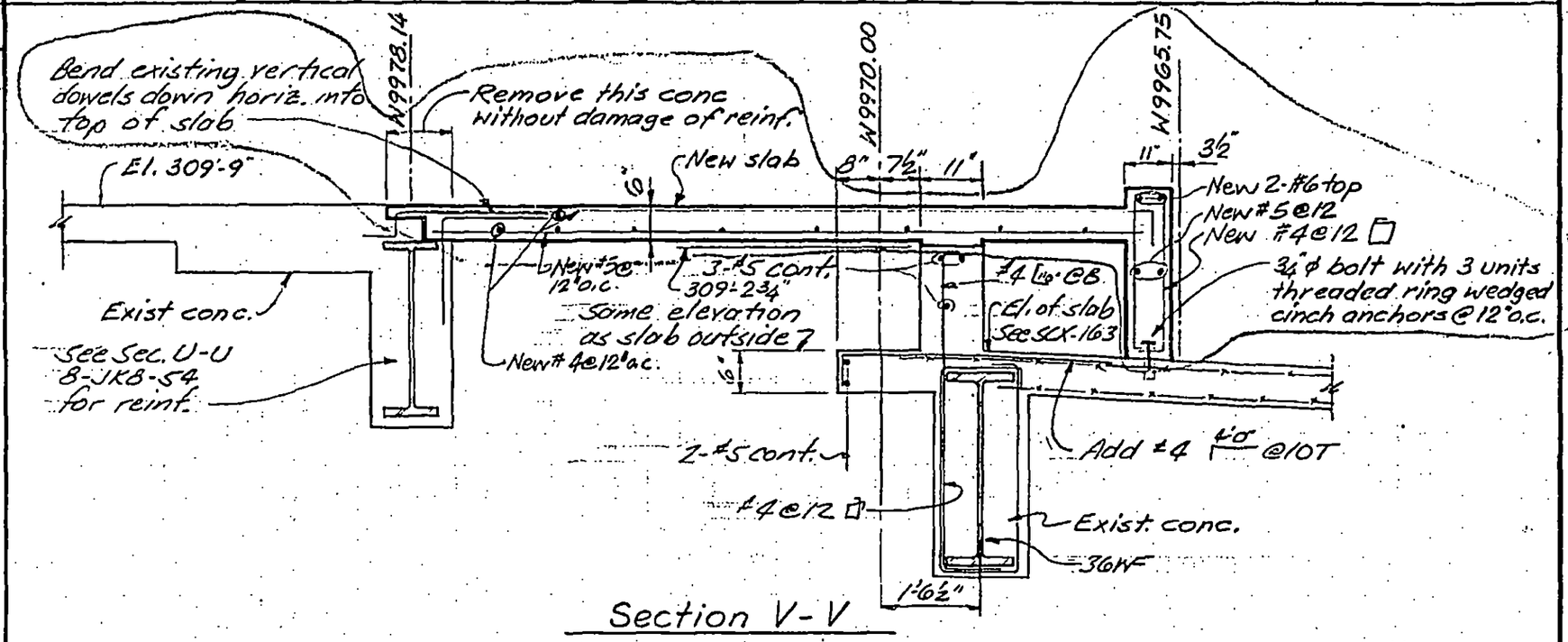

Section V-V

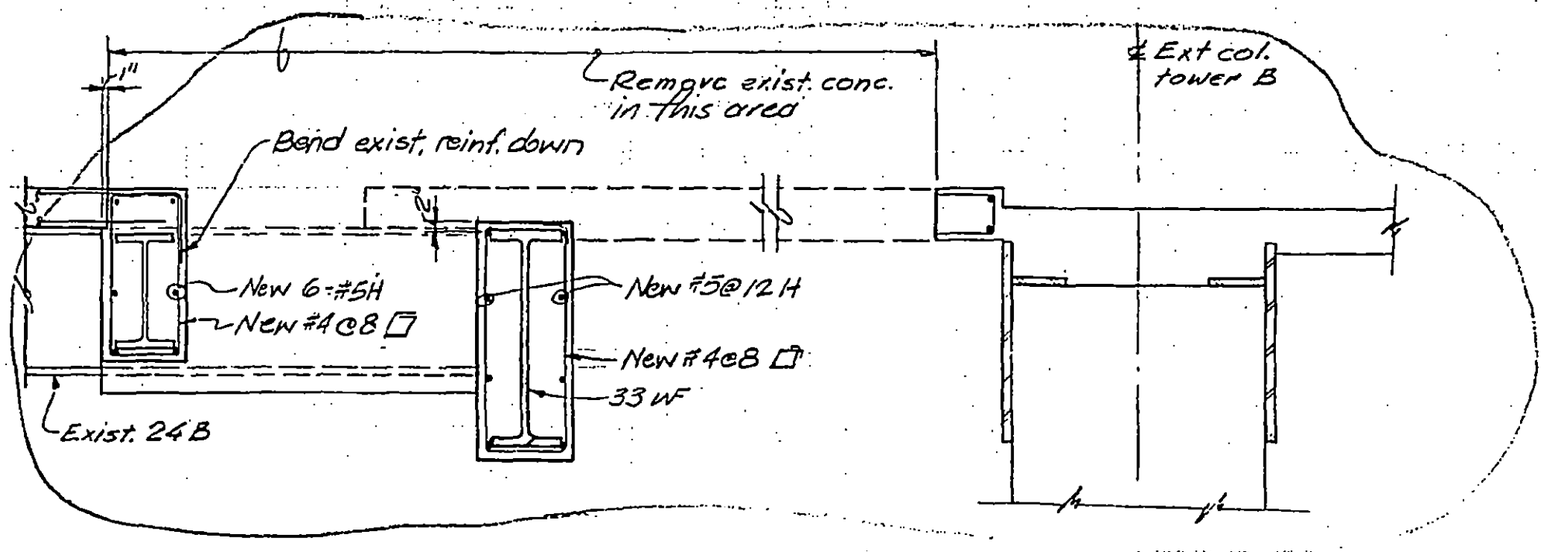

Section W-W

LICENSED PROFESSIONAL ENGINEER LESLIE E. ROBERTSON NO. 34360 UNIVERSITY OF THE STATE OF NEW YORK

DESIGNED P.Y.

DRAWN J. Gricius

REVIEWED WOD

8-JK8-54.13

SKILLING, HELLE, CHRISTIANSEN, ROBERTSON — Structural & Civil Engineers

PROJECT: THE WORLD TRADE CENTER | TITLE: SECTIONS AT El. 310 | DATE: 2-9-70

REVISIONS

6-15-73

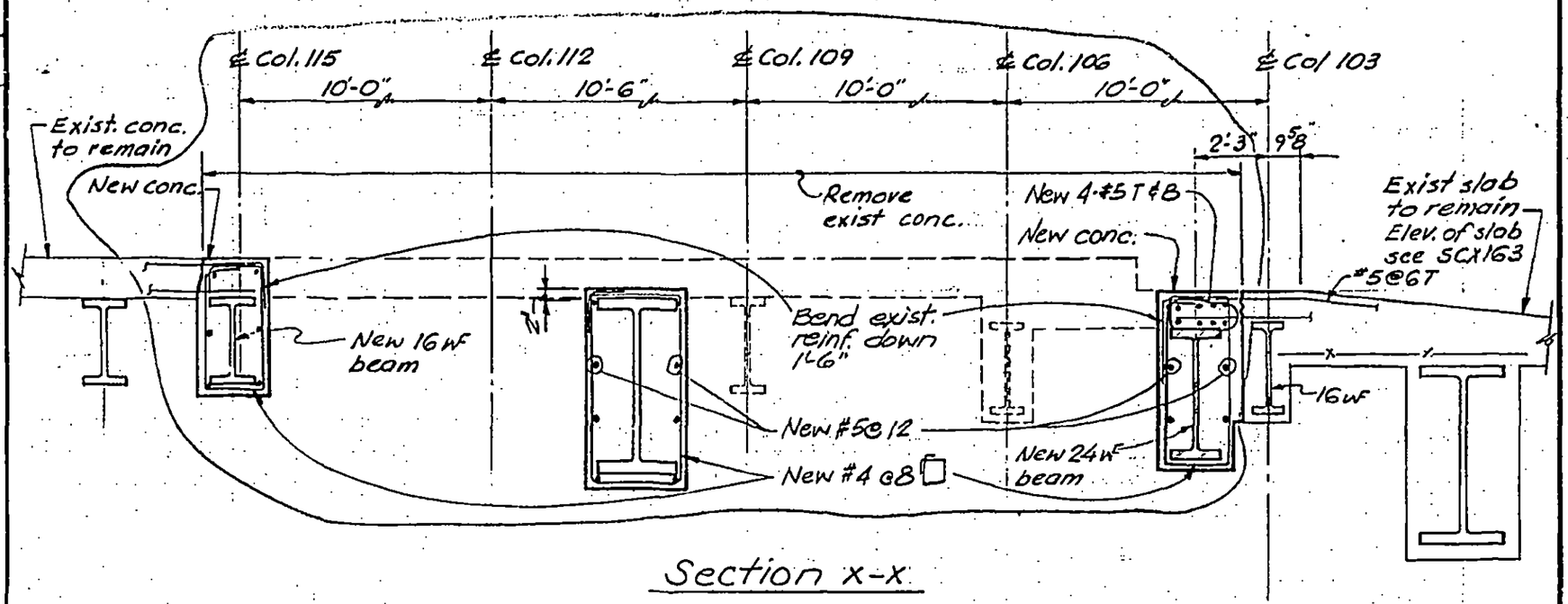

Section X-X

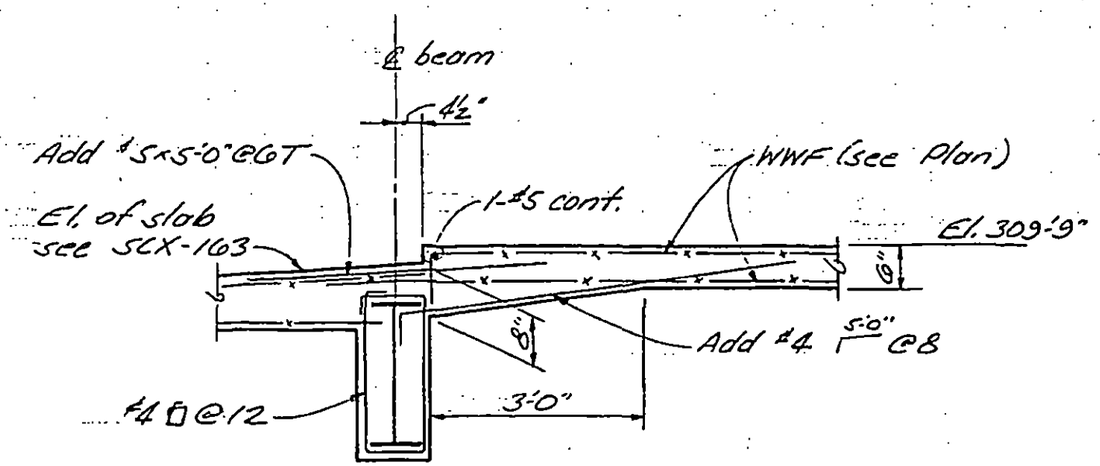

Section Y-Y
(½"=1'-0")

LICENSED PROFESSIONAL ENGINEER — LESLIE E. ROBERTSON — No. 34360 — UNIVERSITY OF THE STATE OF NEW YORK

DESIGNED

DRAWN: J. Gricius

REVIEWED: WAB

8-JK8-54.14

SKILLING, HELLE, CHRISTIANSEN, ROBERTSON — Structural & Civil Engineers

PROJECT THE WORLD TRADE CENTER | TITLE SECTIONS AT EL. 279'-3" | DATE 7-18-69

REVISIONS

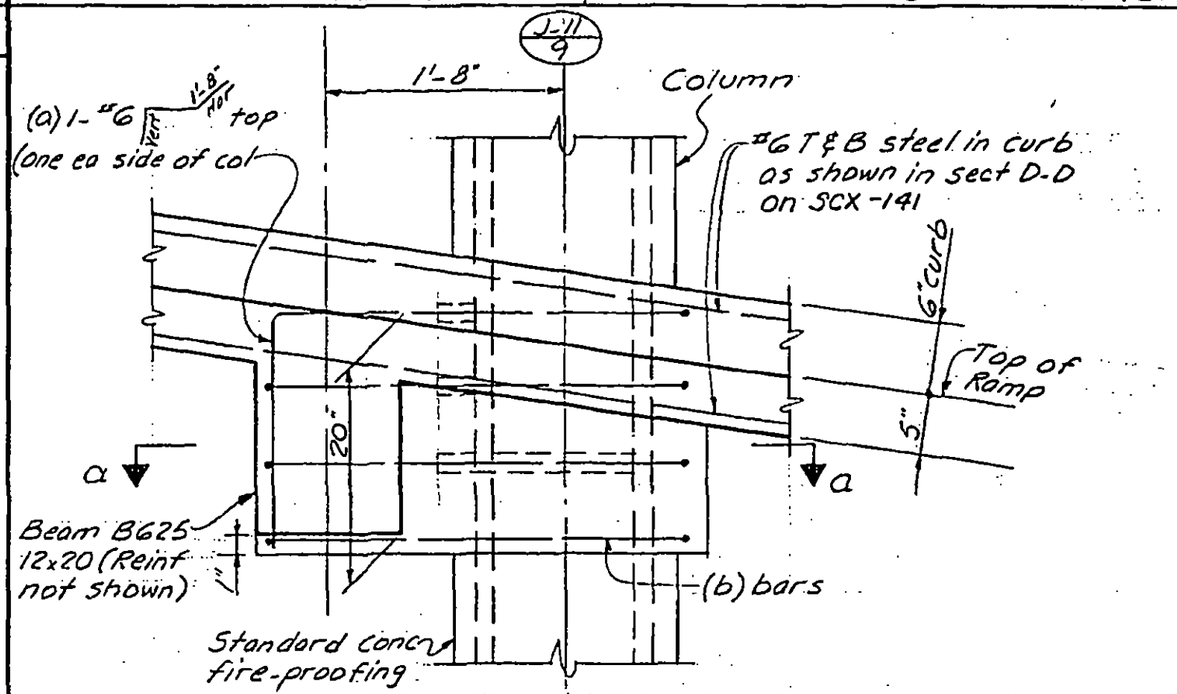

Section A-A
(1"=1'-0")

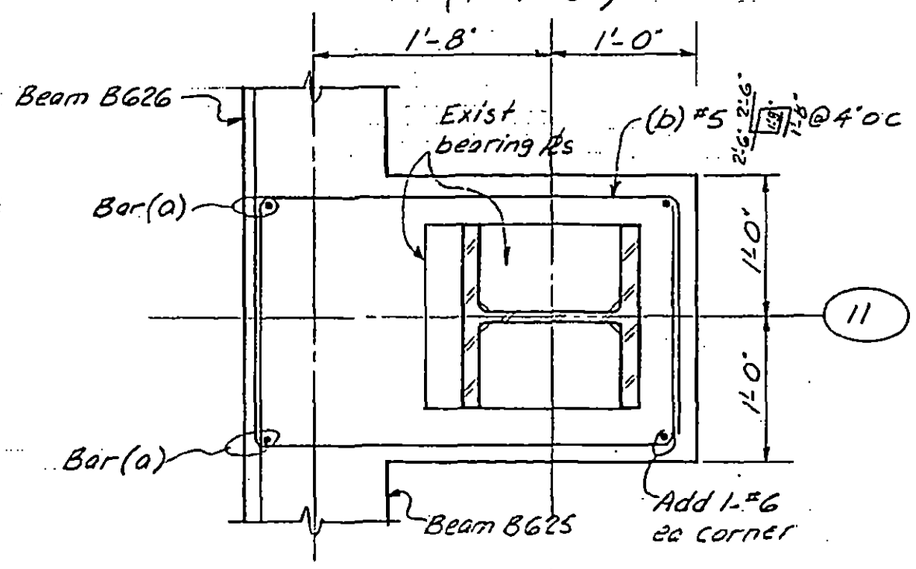

Section a-a
(1"=1'-0")

LICENSED PROFESSIONAL ENGINEER — LESLIE E. ROBERTSON — No. 34360 — UNIVERSITY OF THE STATE OF NEW YORK

DESIGNED

DRAWN A.L. FRANQUI

REVIEWED E.L.

8-JK8-56.1

SKILLING, HELLE, CHRISTIANSEN, ROBERTSON — Structural & Civil Engineers

PROJECT THE WORLD TRADE CENTER | TITLE SECTION AT EL. 279'-3" | DATE 7-18-69

REVISIONS

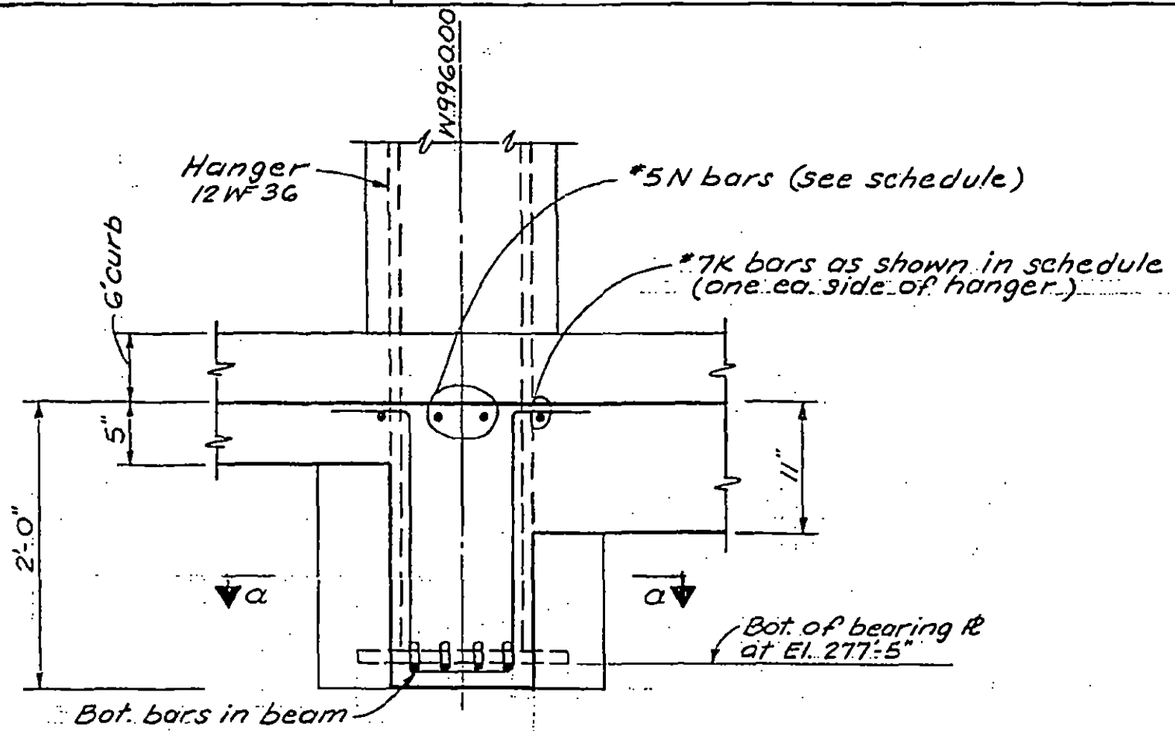

Section B-B
(1" = 1'-0")

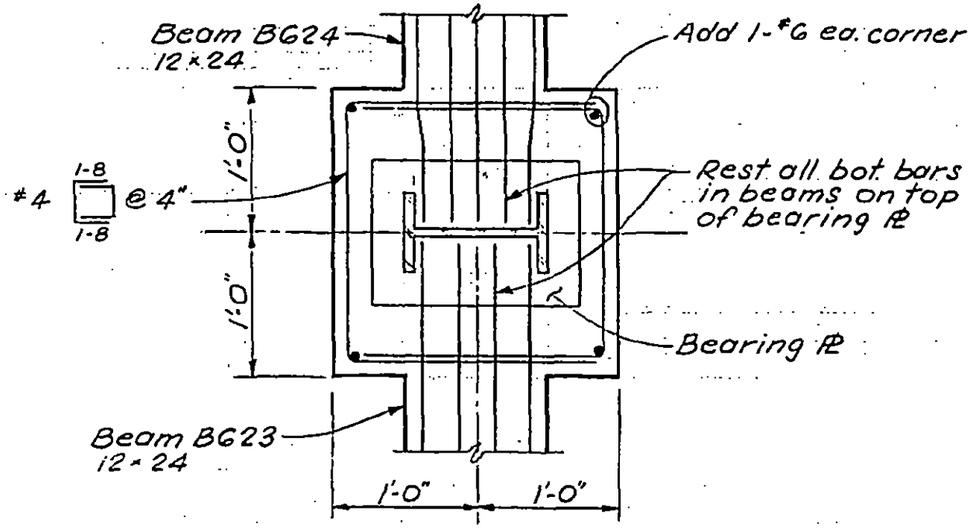

Section a-a
(1" = 1'-0")

LICENSED PROFESSIONAL ENGINEER
LESLIE E. ROBERTSON
No. 34360
UNIVERSITY OF THE STATE OF NEW YORK

DESIGNED

DRAWN
S.C.

REVIEWED
E.L.

8-JK.8-56.2

SKILLING - HELLE - CHRISTIANSEN - ROBERTSON Structural & Civil Engineers

PROJECT WORLD TRADE CENTER | TITLE SECTIONS AT EL. 279'-3" | DATE 7-18-68

REVISIONS
12-30-69
3-6-70

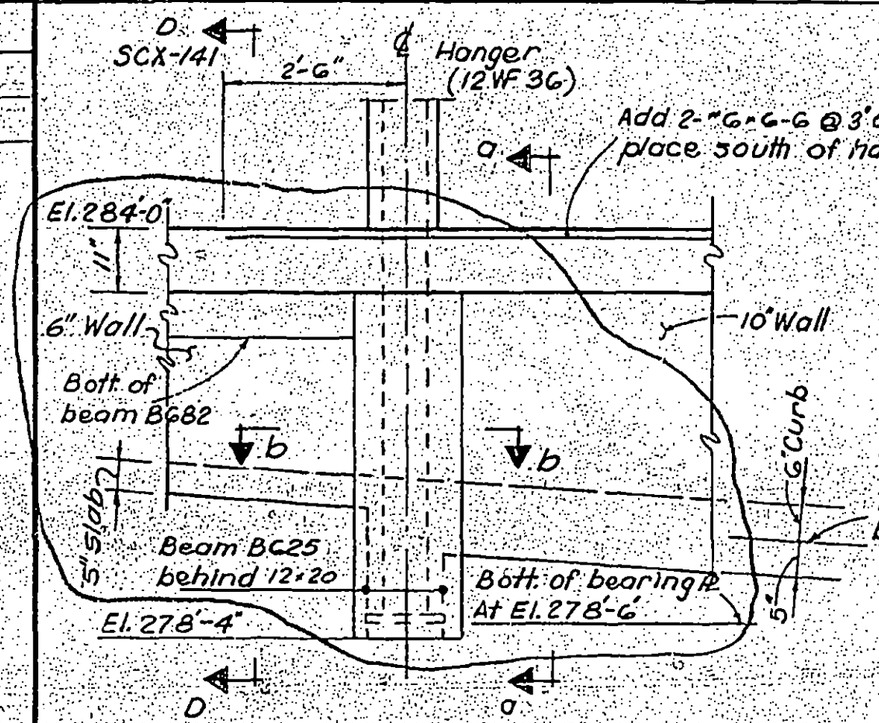

Section C-C
(½" = 1'-0")

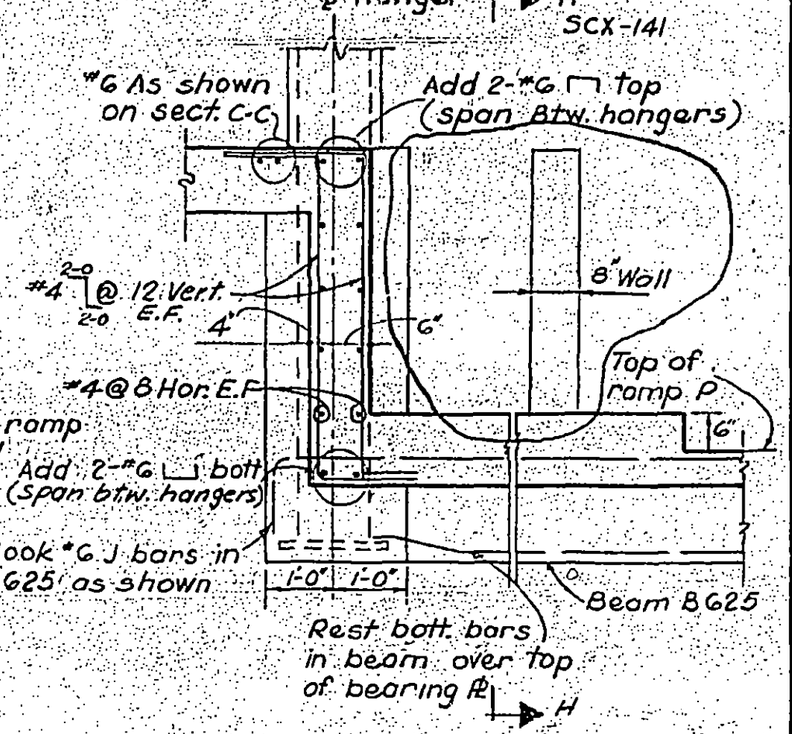

Section a-a
(½" = 1'-0")

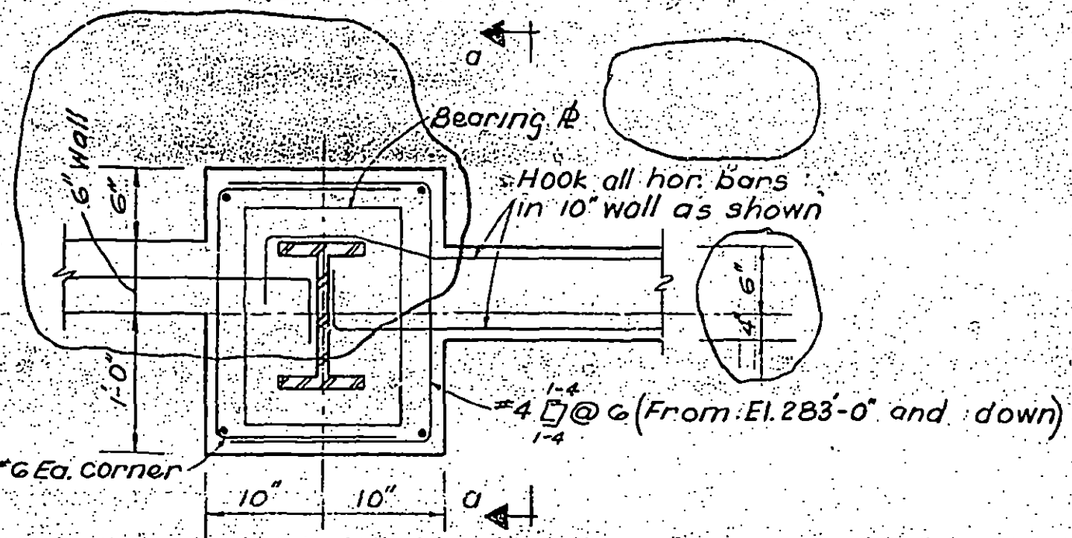

Section b-b
(1" = 1'-0")

LICENSED PROFESSIONAL ENGINEER
LESLIE E. ROBERTSON
No. 34360
UNIVERSITY OF THE STATE OF NEW YORK

DRAWN D.U.
REVIEWED E.L.

8-JK8-SC.3

SKILLING, HELLE, CHRISTIANSEN, ROBERTSON — Structural & Civil Engineers

PROJECT THE WORLD TRADE CENTER | TITLE SECTIONS AT EL. 279'-3" | DATE 7-18-69.

REVISIONS

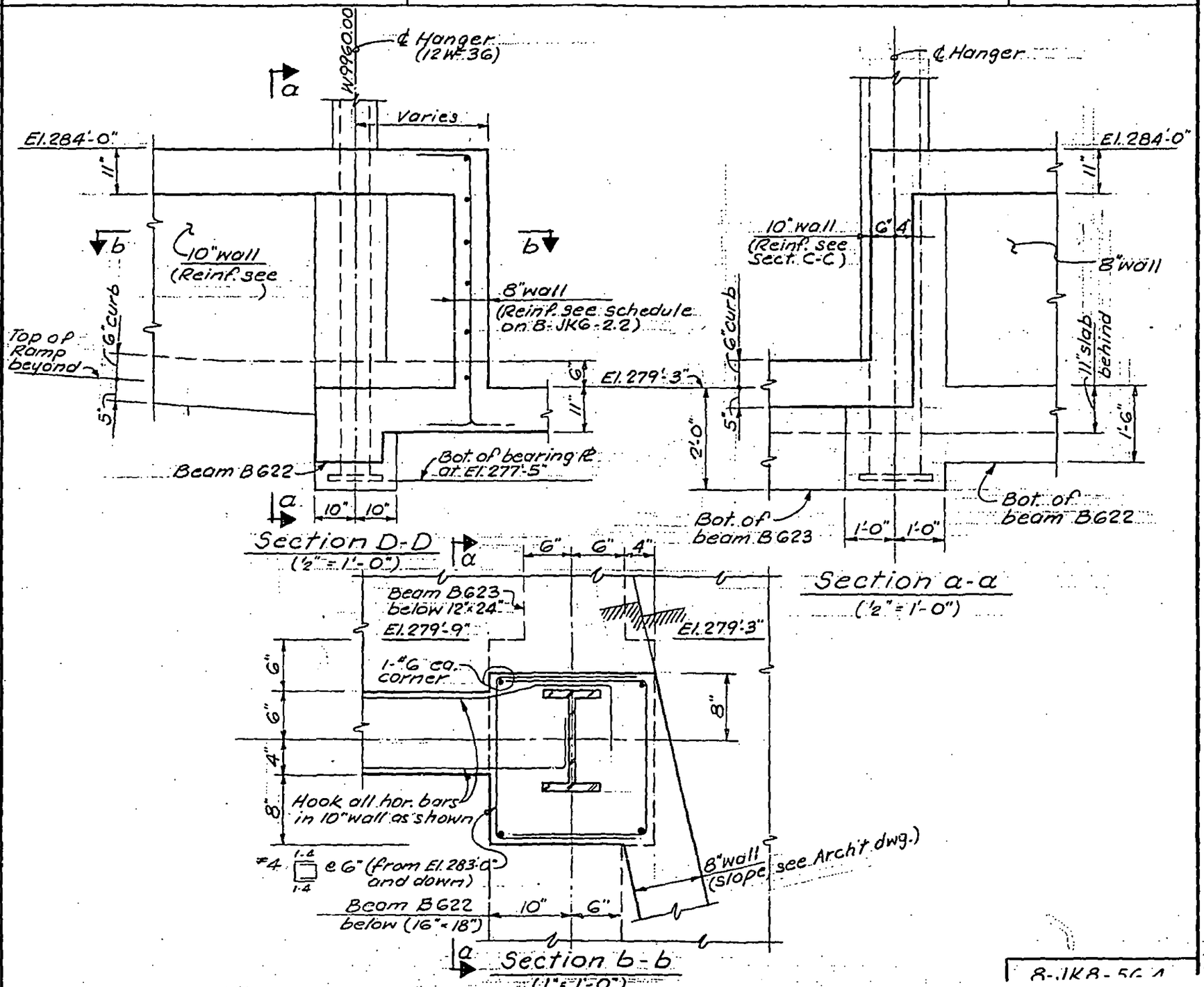

LICENSED PROFESSIONAL ENGINEER — LESLIE E. ROBERTSON — No. 34360 — UNIVERSITY OF THE STATE OF NEW YORK

DESIGNED

DRAWN S.C.

REVIEWED E.L.

B-JKB-5C.1

SKILLING - HELLE - CHRISTIANSEN - ROBERTSON ◇ Structural & Civil Engineers

PROJECT WORLD TRADE CENTER | TITLE SECTION AT EL. 279'-3" | DATE 7-18-69

REVISIONS

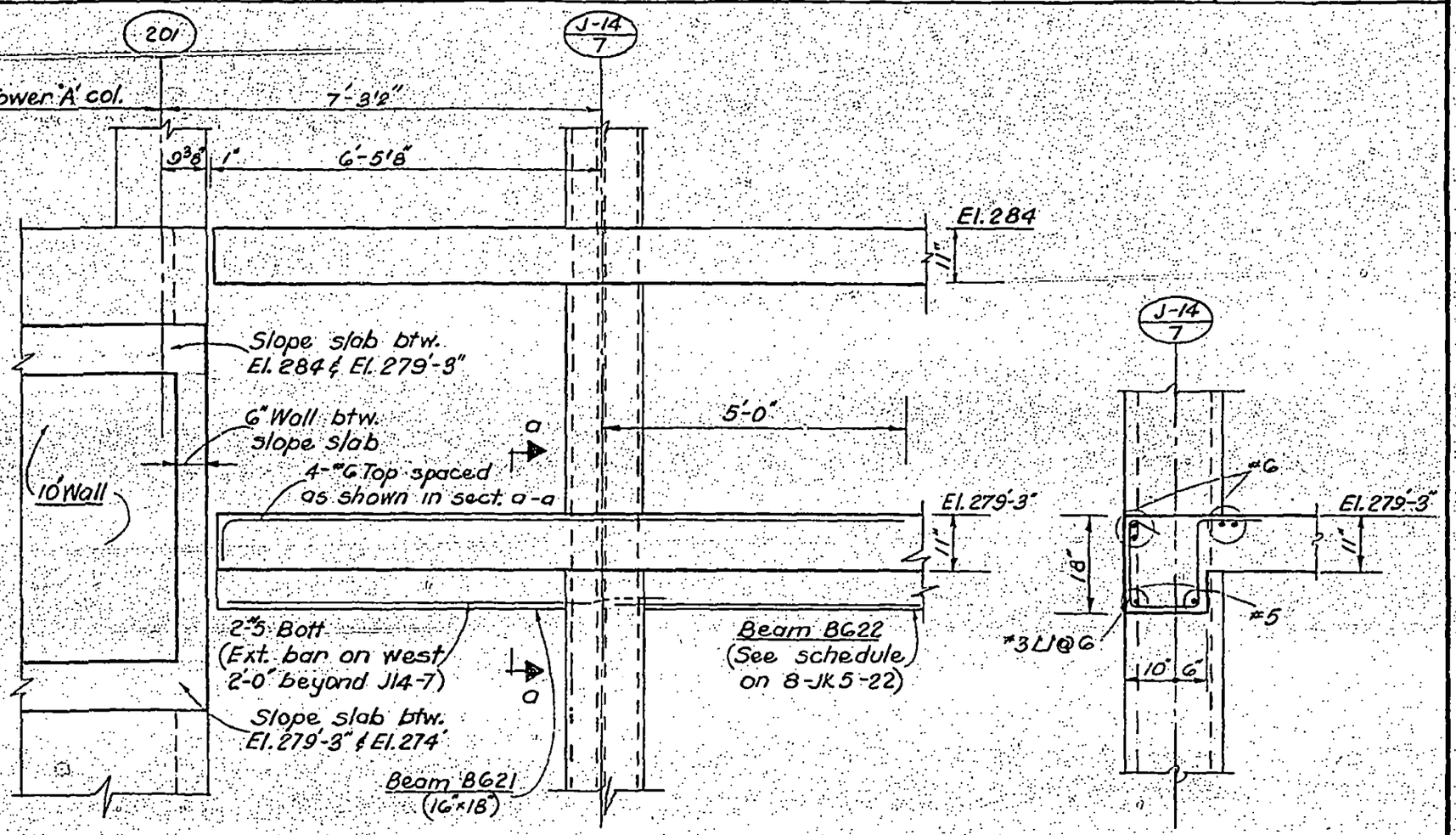

Section E-E
(½" = 1'-0")

Section a-a
(½" = 1'-0")

LICENSED PROFESSIONAL ENGINEER
LESLIE E. ROBERTSON
No. 34960
UNIVERSITY OF THE STATE OF NEW YORK

DRAWN
D.U.

REVIEWED
E.L.

8'-JK8-5G.5

SKILLING, HELLE, CHRISTIANSEN, ROBERTSON — Structural & Civil Engineers

PROJECT THE WORLD TRADE CENTER | TITLE SECTIONS AT EL. 279'-3" | DATE 9-23-69

REVISIONS

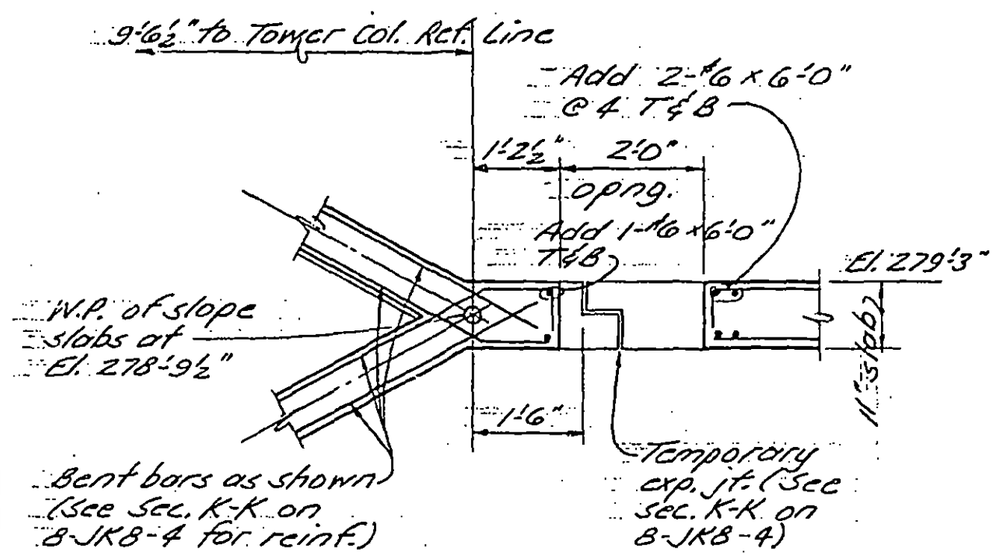

Section F-F
(½" = 1'-0")

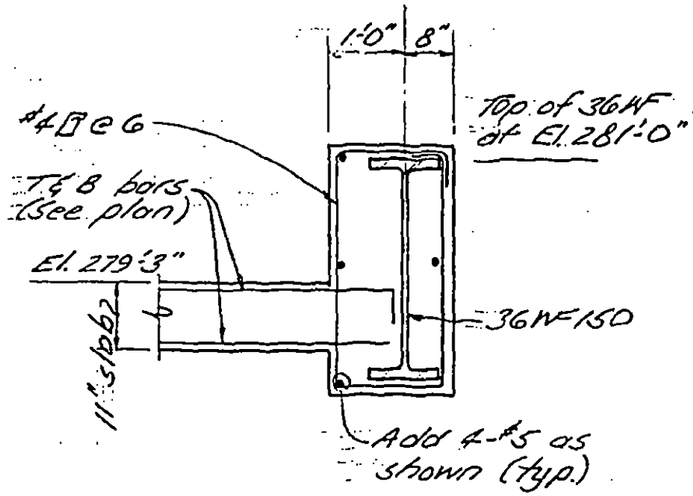

Section G-G
(½" = 1'-0")

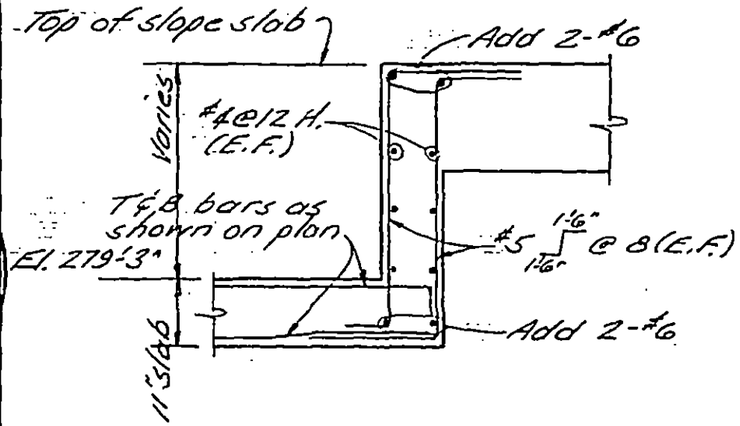

Section H-H
(½" = 1'-0")

LICENSED PROFESSIONAL ENGINEER ☆ LESLIE E. ROBERTSON ☆ No. 34360 ☆ UNIVERSITY OF THE STATE OF NEW YORK

DESIGNED

DRAWN J. Adams

REVIEWED E.L.

8-JK8-56.6

SKILLING, HELLE, CHRISTIANSEN, ROBERTSON — Structural & Civil Engineers

PROJECT: THE WORLD TRADE CENTER | TITLE: SECTION AT EL 279'-3" | DATE: 9-23-69

REVISIONS

10-30-69

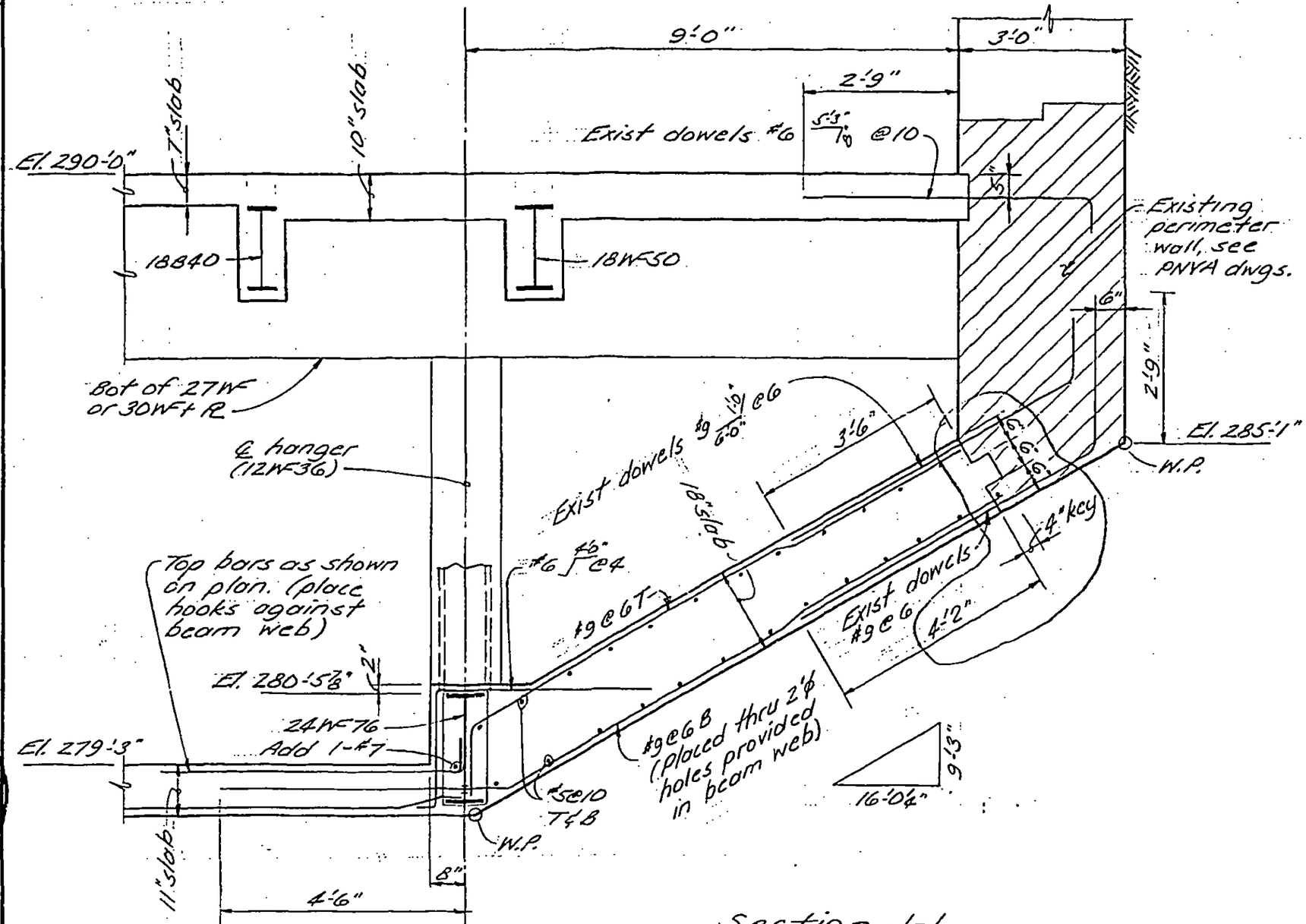

Section J-J
(½"=1'-0")

LICENSED PROFESSIONAL ENGINEER
LESLIE E. ROBERTSON
No. 34360
UNIVERSITY OF THE STATE OF NEW YORK

DESIGNED

DRAWN
J. Hrams

REVIEWED
E.L.

8-JKB-56.7

SKILLING, HELLE, CHRISTIANSEN, ROBERTSON — Structural & Civil Engineers

PROJECT THE WORLD TRADE CENTER | TITLE SECTION AT EL. 279'-3" | DATE 11-25-69

REVISIONS

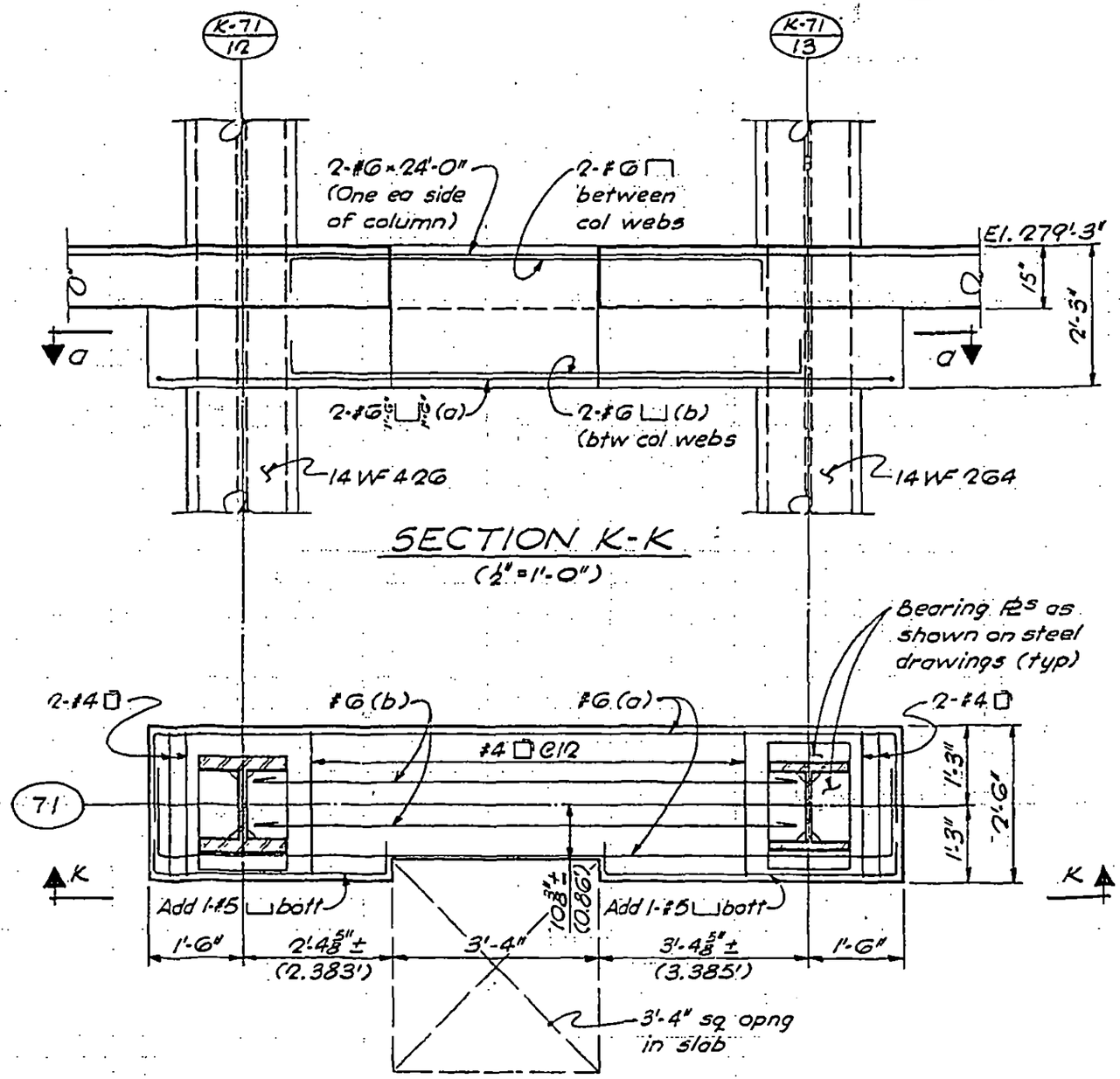

SECTION K-K
(½" = 1'-0")

SECTION a-a
(½" = 1'-0")

LICENSED PROFESSIONAL ENGINEER
LESLIE E. ROBERTSON
No. 34360
UNIVERSITY OF THE STATE OF NEW YORK

DESIGNED

DRAWN G.K.

REVIEWED E.L.

8-JK8-5G.8

SKILLING, HELLE, CHRISTIANSEN, ROBERTSON — Structural & Civil Engineers

PROJECT THE WORLD TRADE CENTER | TITLE SECTION AT EL. 279'-3" | DATE 11-25-69

REVISIONS

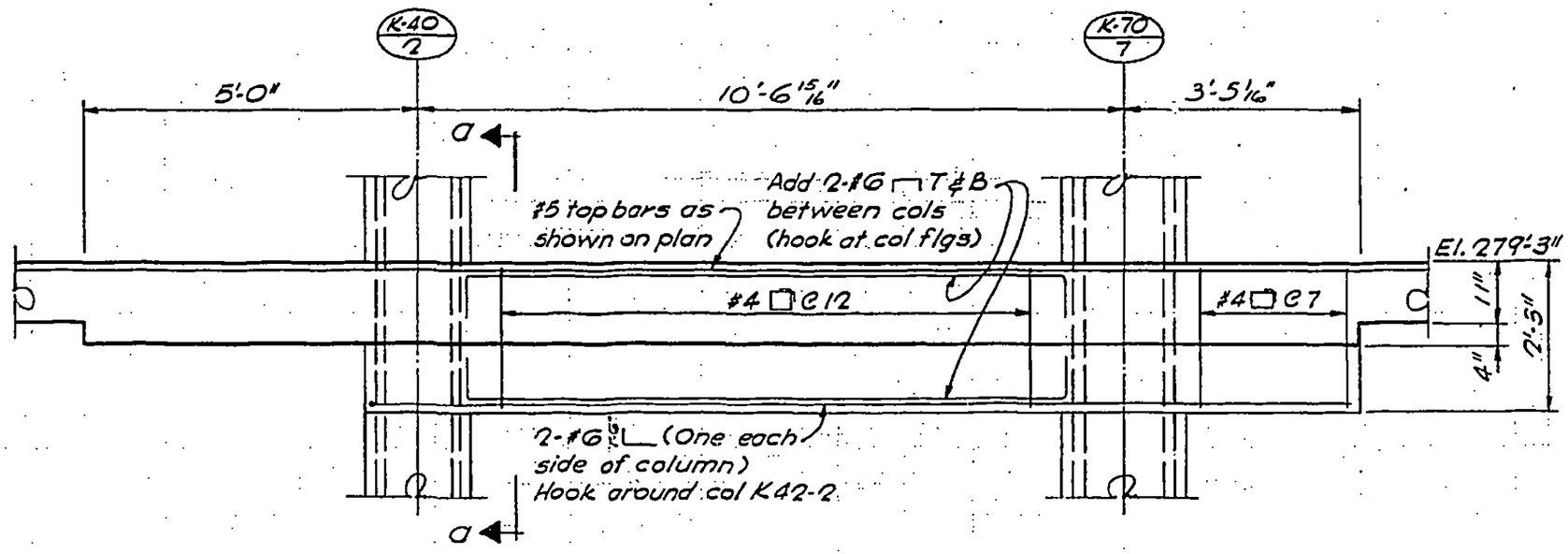

SECTION L-L

(½"=1'-0")

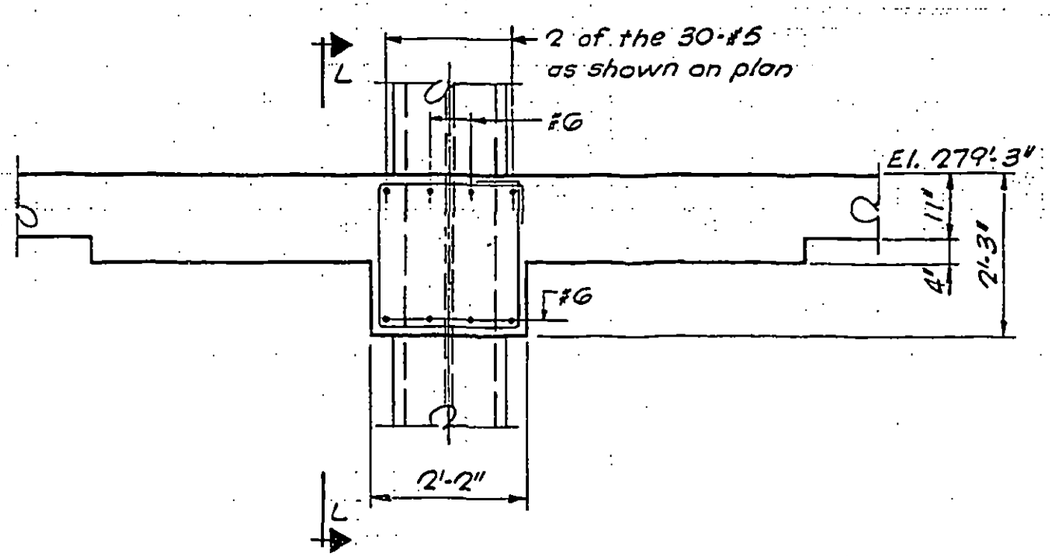

SECTION 0-0

(½"=1'-0")

LICENSED PROFESSIONAL ENGINEER
LESLIE E. ROBERTSON
No. 34360
UNIVERSITY OF THE STATE OF NEW YORK

DESIGNED

DRAWN G.K.

REVIEWED E.L.

8-JK8-56.9

SKILLING, HELLE, CHRISTIANSEN, ROBERTSON

PROJECT THE WORLD TRADE CENTER

TITLE SECTION

REVISIONS

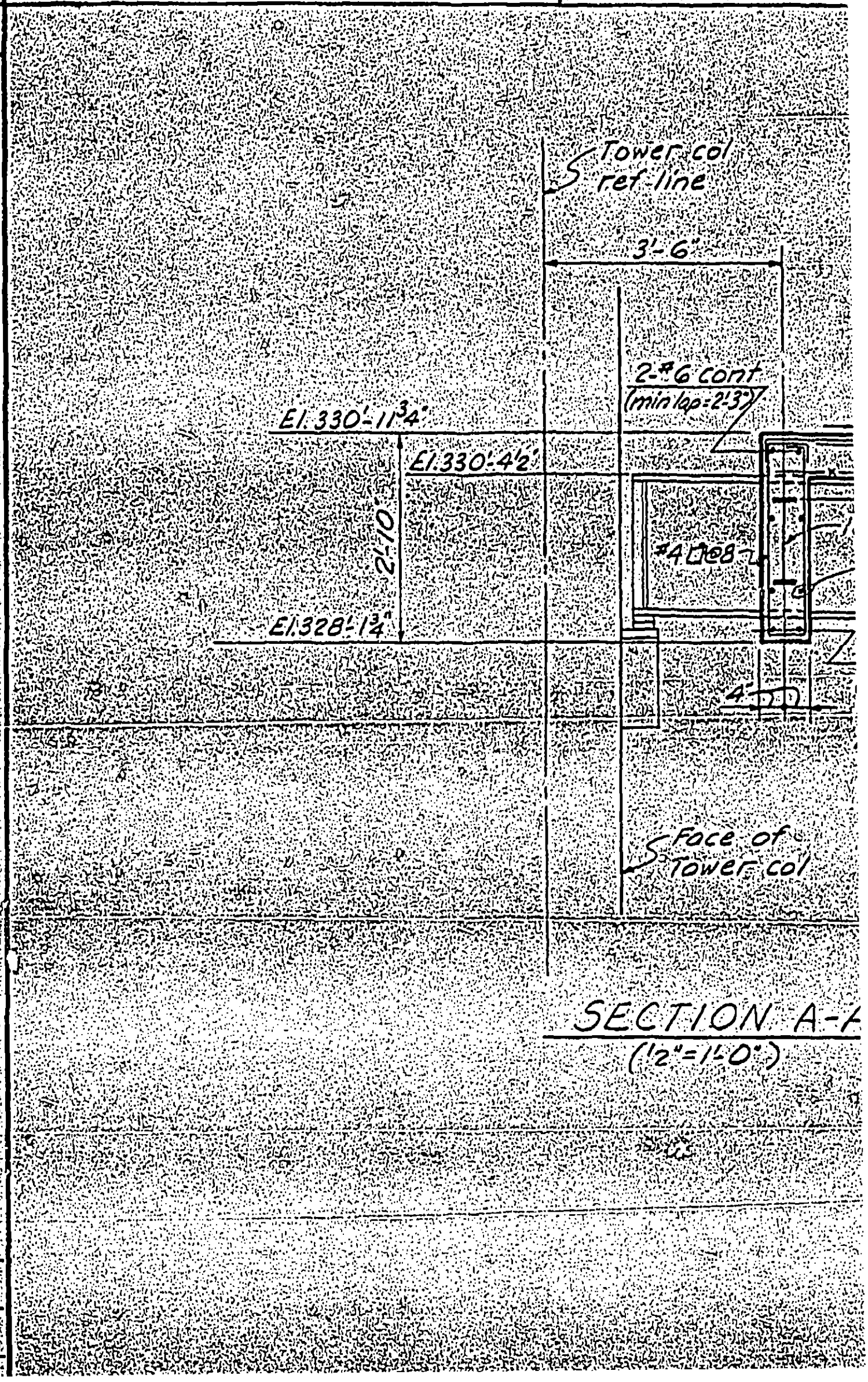

SECTION A-A

(12" = 1'-0")

LICENSED PROFESSIONAL ENGINEER
LESLIE E. ROBERTSON
No. 34380
STATE OF NEW YORK

DESIGNED

DRAWN A.F.

REVIEWED

Structural & Civil Engineers

...TION AT EL 332'-0"

DATE 5-1-70

...nt
...3)

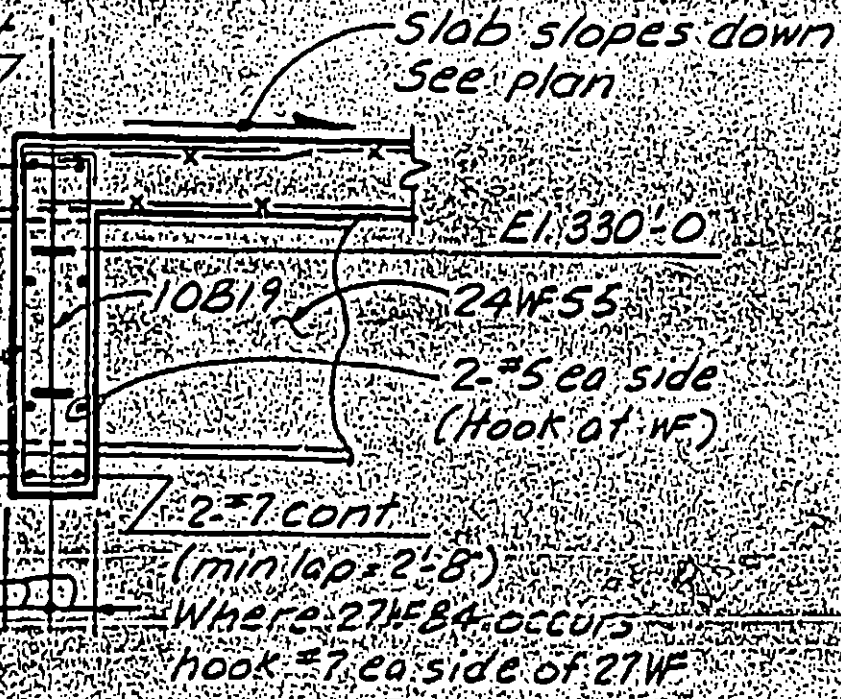

...of
...r col

...N A-A
...0.)

SKILLING, HELLE, CHRISTIANSEN, ROBERTSON — Structural & Civil Engineers

PROJECT: THE WORLD TRADE CENTER | TITLE: SECTION AT EL. 332'-0" | DATE: 5-1-70

REVISIONS

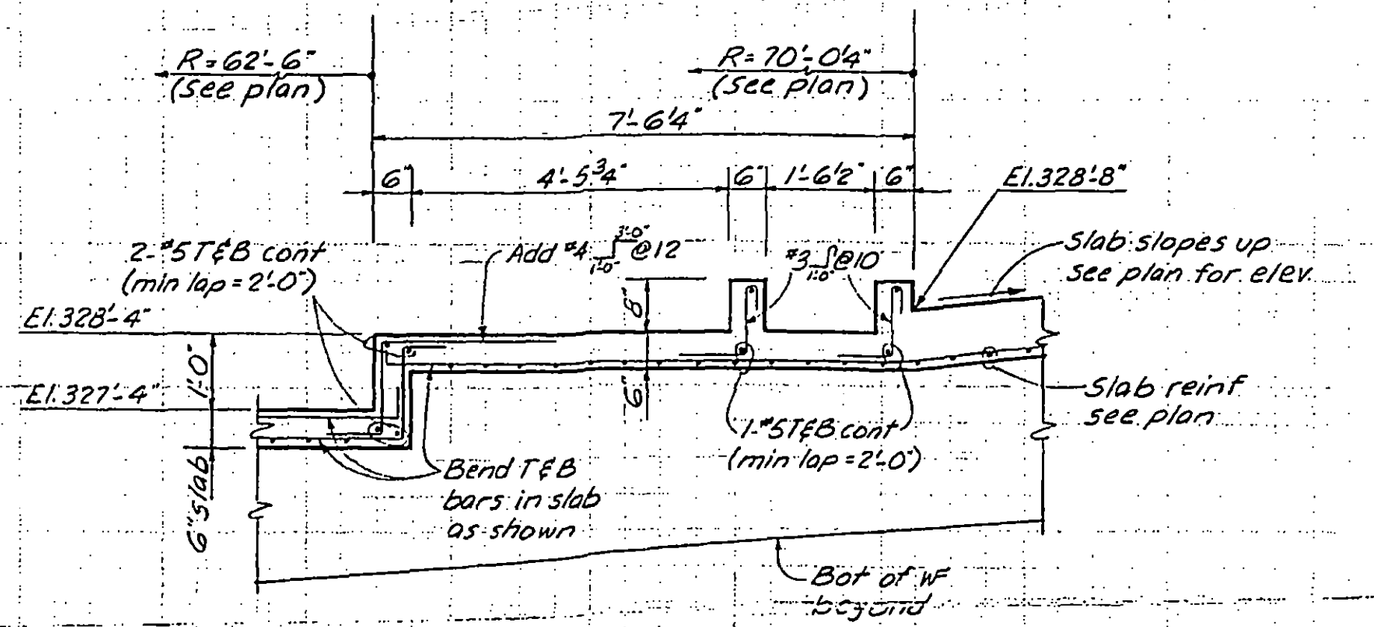

SECTION B-B
(½" = 1'-0")

LICENSED PROFESSIONAL ENGINEER — LESLIE E. ROBERTSON — No. 34360 — UNIVERSITY OF THE STATE OF NEW YORK

DESIGNED

DRAWN A.F.

REVIEWED E.L.

8-1K8-57.2

SKILLING, HELLE, CHRISTIANSEN, ROBERTSON — Structural & Civil Engineers

PROJECT: THE WORLD TRADE CENTER | TITLE: SECTION AT EL.332'-0" | DATE: 5-1-70

REVISIONS

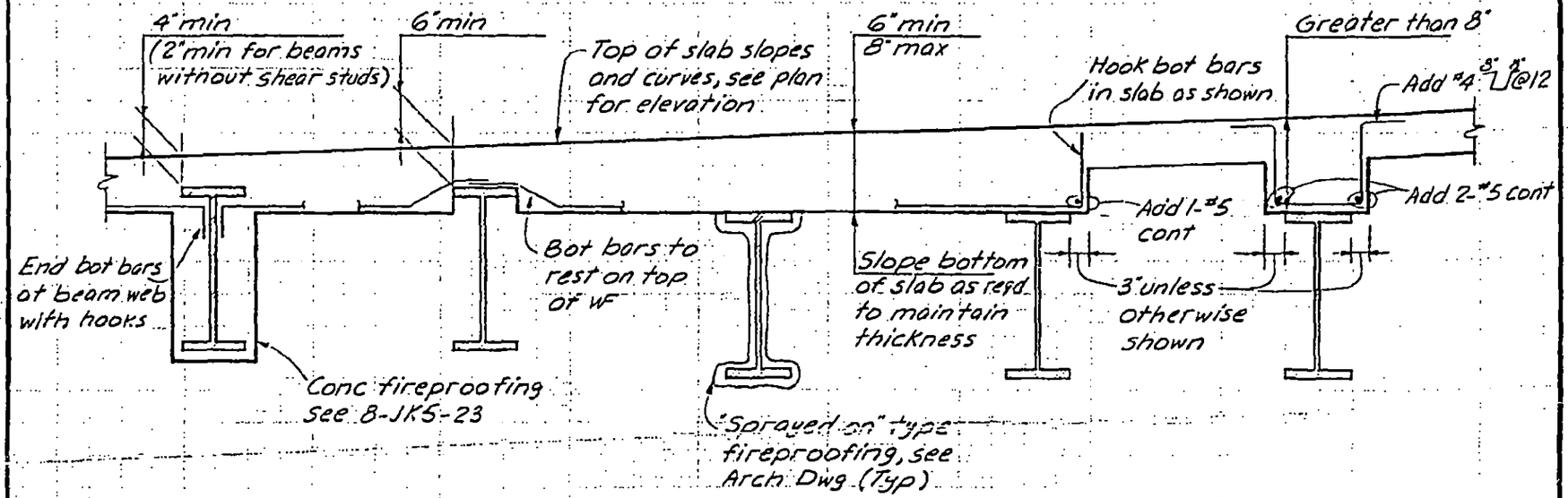

SECTION C-C
(No scale)

LICENSED PROFESSIONAL ENGINEER
LESLIE E. ROBERTSON
No. 34360
UNIVERSITY OF THE STATE OF NEW YORK

DESIGNED

DRAWN A.F.

REVIEWED E.L.

8-JK8-57.3

SKILLING, HELLE, CHRISTIANSEN, ROBERTSON — Structural & Civil Engineers

PROJECT: THE WORLD TRADE CENTER | TITLE: SECTION AT EL. 332'-0" | DATE: 5-1-70

REVISIONS

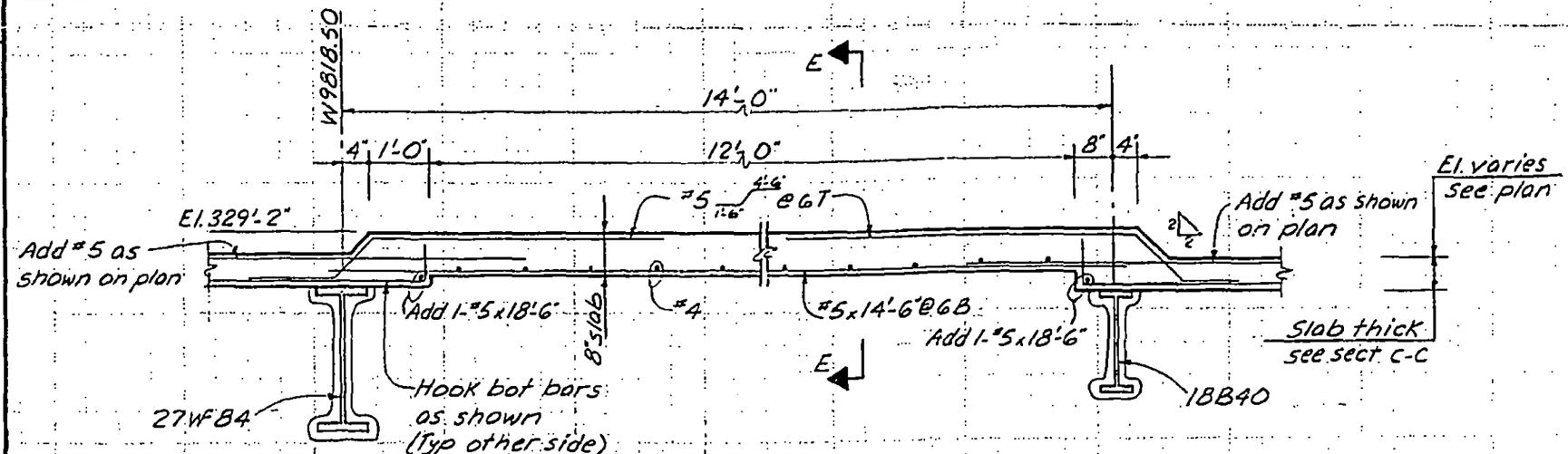

SECTION D-D
(1/2"=1'-0")

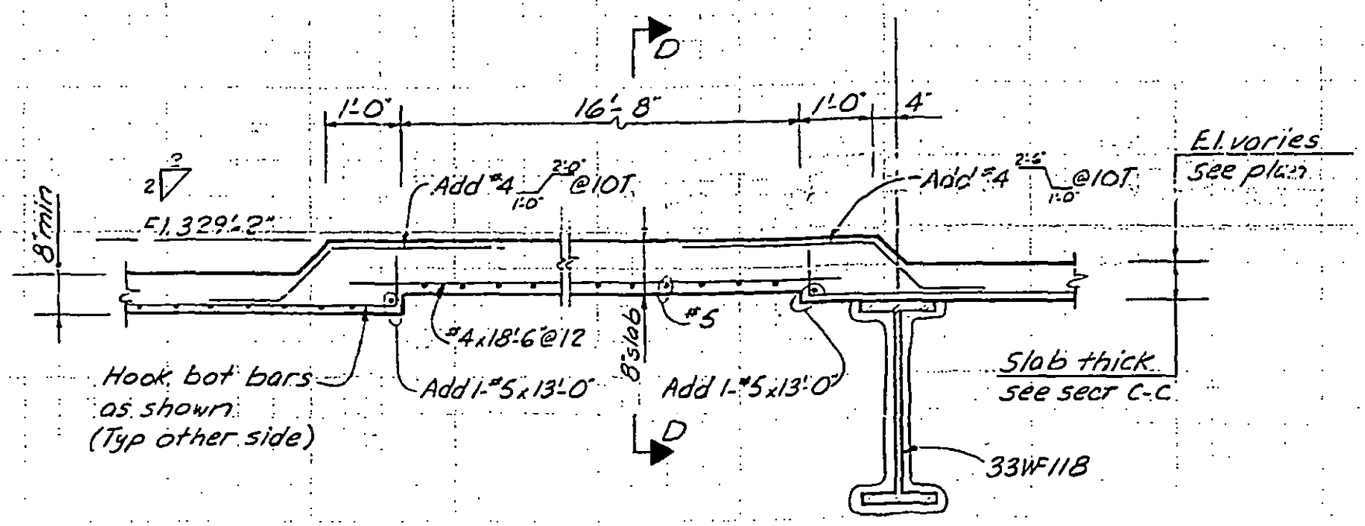

SECTION E-E
(1/2"=1'-0")

LICENSED PROFESSIONAL ENGINEER — LESLIE E. ROBERTSON — No. 34360 — UNIVERSITY OF THE STATE OF NEW YORK

DESIGNED

DRAWN A.F

REVIEWED E.L

8-JK8-57.4

SKILLING, HELLE, CHRISTIANSEN, ROBERTSON — Structural & Civil Engineers

PROJECT THE WORLD TRADE CENTER | TITLE SECTION AT EL. 332'-0" | DATE 5-1-70

REVISIONS

5-15-70

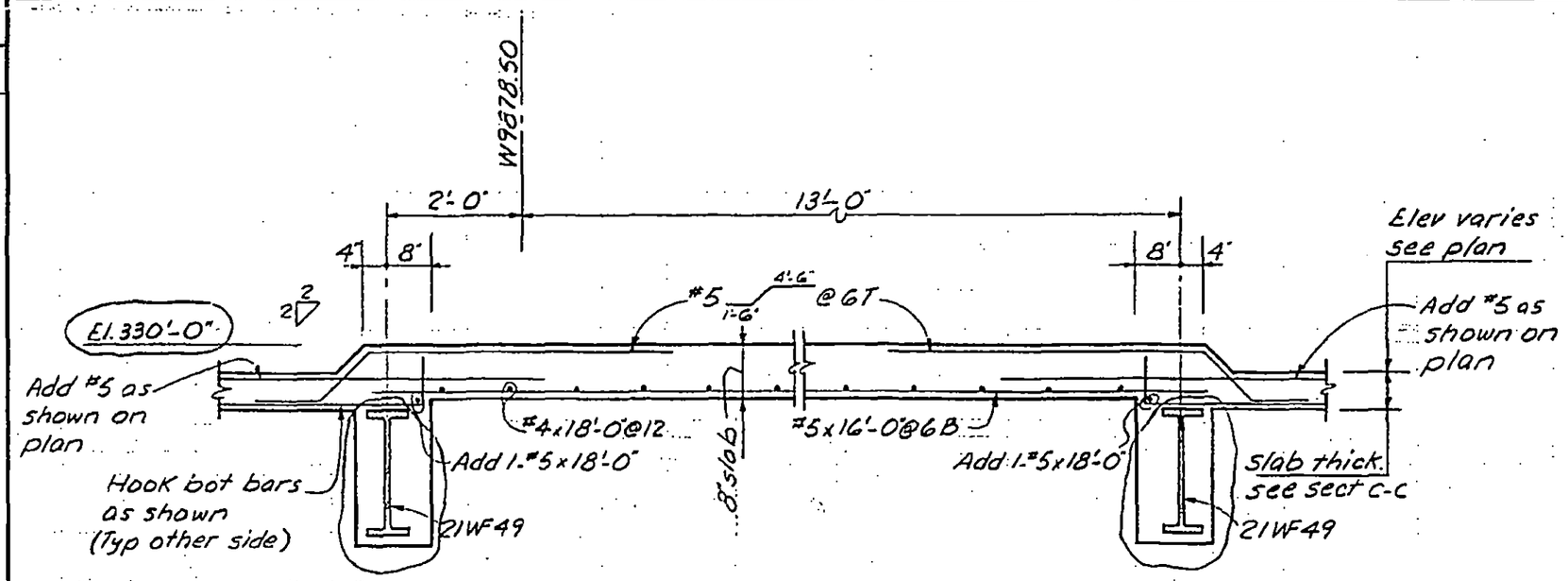

SECTION F-F
(1/2" = 1'-0")

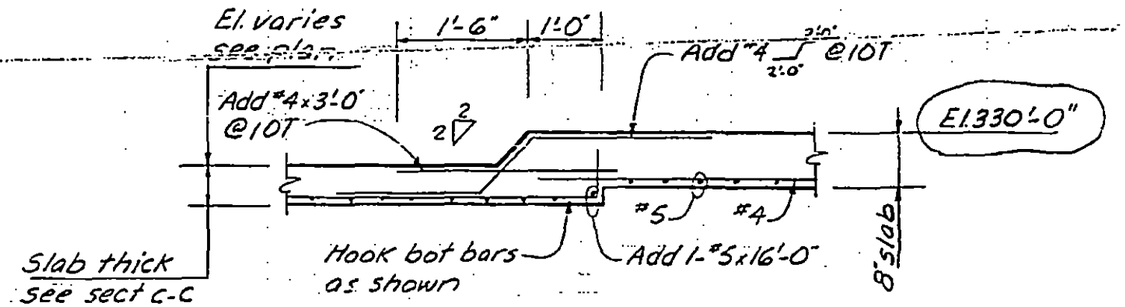

SECTION G-G
(1/2" = 1'-0")

LICENSED PROFESSIONAL ENGINEER — LESLIE E. ROBERTSON — No. 34360 — UNIVERSITY OF THE STATE OF NEW YORK

DESIGNED

DRAWN A.F.

REVIEWED E.L.

8-JK8-575

SKILLING, HELLE, CHRISTIANSEN, ROBERTSON — Structural & Civil Engineers

PROJECT THE WORLD TRADE CENTER | TITLE SECTION AT EL. 332'-0" | DATE 5-1-70

REVISIONS

3-9-71

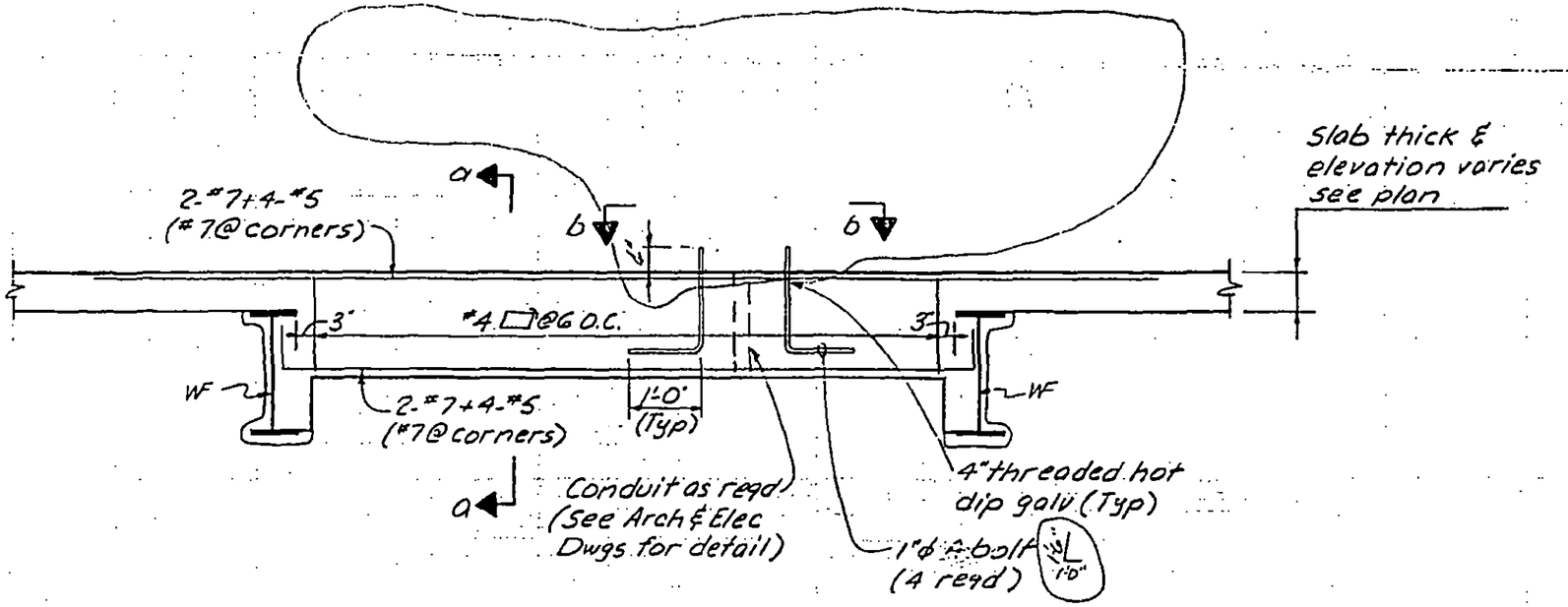

SECTION H-H
(1/2"=1'-0")

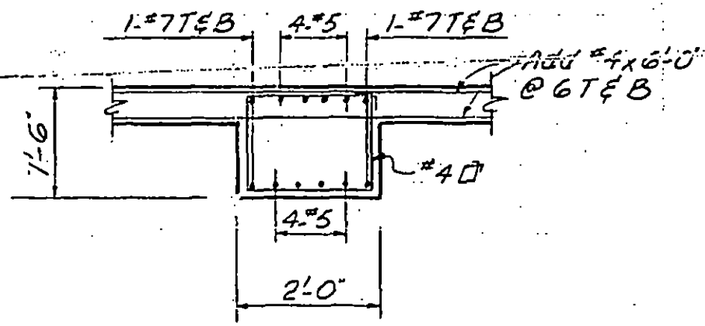

Section a-a
(1/2"=1'-0")

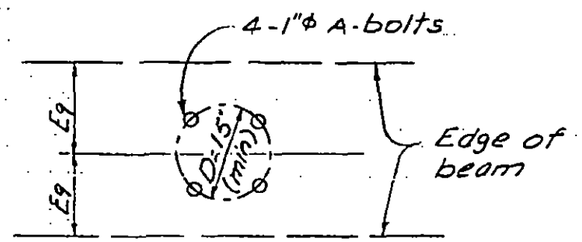

Section b-b
(1/2"=1'-0")

LICENSED PROFESSIONAL ENGINEER
LESLIE E. ROBERTSON
No. 34360
UNIVERSITY OF THE STATE OF NEW YORK

DESIGNED

DRAWN A.F.

REVIEWED E.L.

8-JK8-57.6

SKILLING, HELLE, CHRISTIANSEN, ROBERTSON — Structural & Civil Engineers

PROJECT: THE WORLD TRADE CENTER | TITLE: CONCRETE DETAILS - EL. 332 | DATE: 3-2-71

REVISIONS

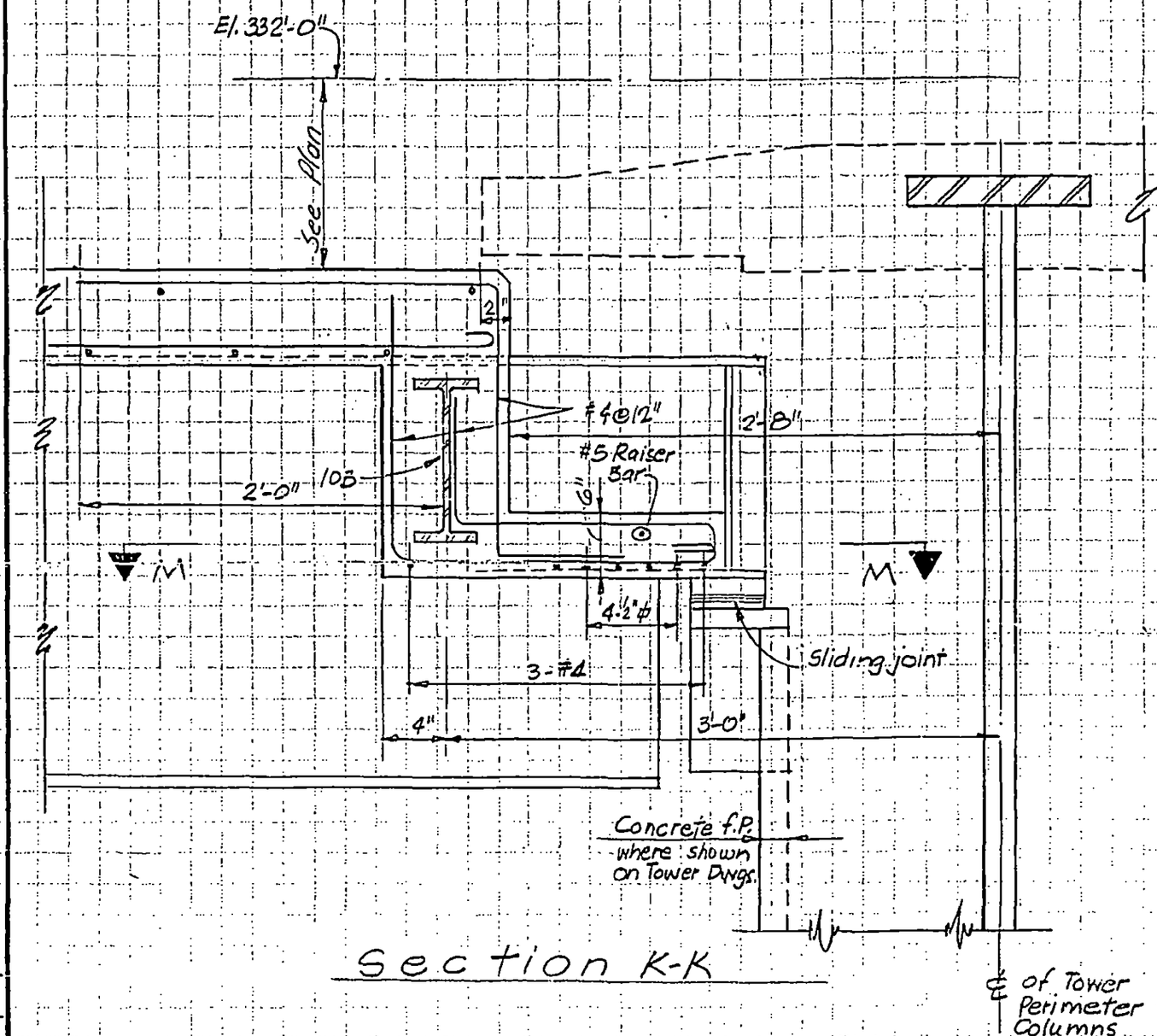

Section K-K

LICENSED PROFESSIONAL ENGINEER — LESLIE E. ROBERTSON — No. 34360 — UNIVERSITY OF THE STATE OF NEW YORK

DESIGNED

DRAWN pozelei

REVIEWED

8-JK8-577

SKILLING, HELLE, CHRISTIANSEN, ROBERTSON — Structural & Civil Engineers

PROJECT: THE WORLD TRADE CENTER | TITLE: CONCRETE DETAILS — EL. 332 | DATE: 3-2-71

REVISIONS

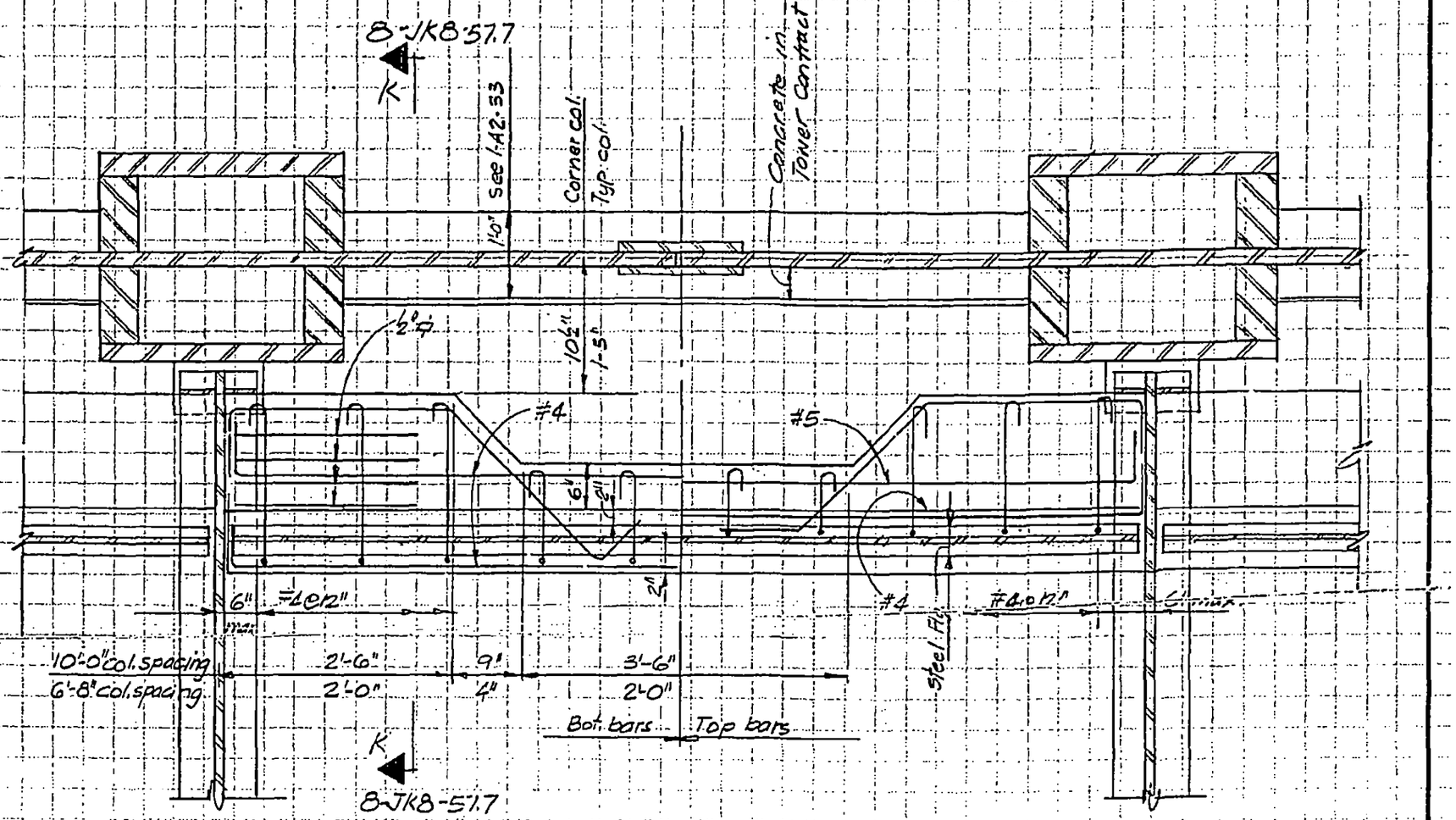

Horizontal Section M-M

LICENSED PROFESSIONAL ENGINEER — LESLIE E. ROBERTSON — No. 34360 — UNIVERSITY OF THE STATE OF NEW YORK

DESIGNED

DRAWN P. Orelli

REVIEWED

8-JK8-57.8

SKILLING, HELLE, CHRISTIANSEN, ROBERTSON — Structural & Civil Engineers

PROJECT: THE WORLD TRADE CENTER | TITLE: CONCRETE DETAILS, EL 332 | DATE: 3-2-71

REVISIONS

4-9-71
Release for construction

12/8/72

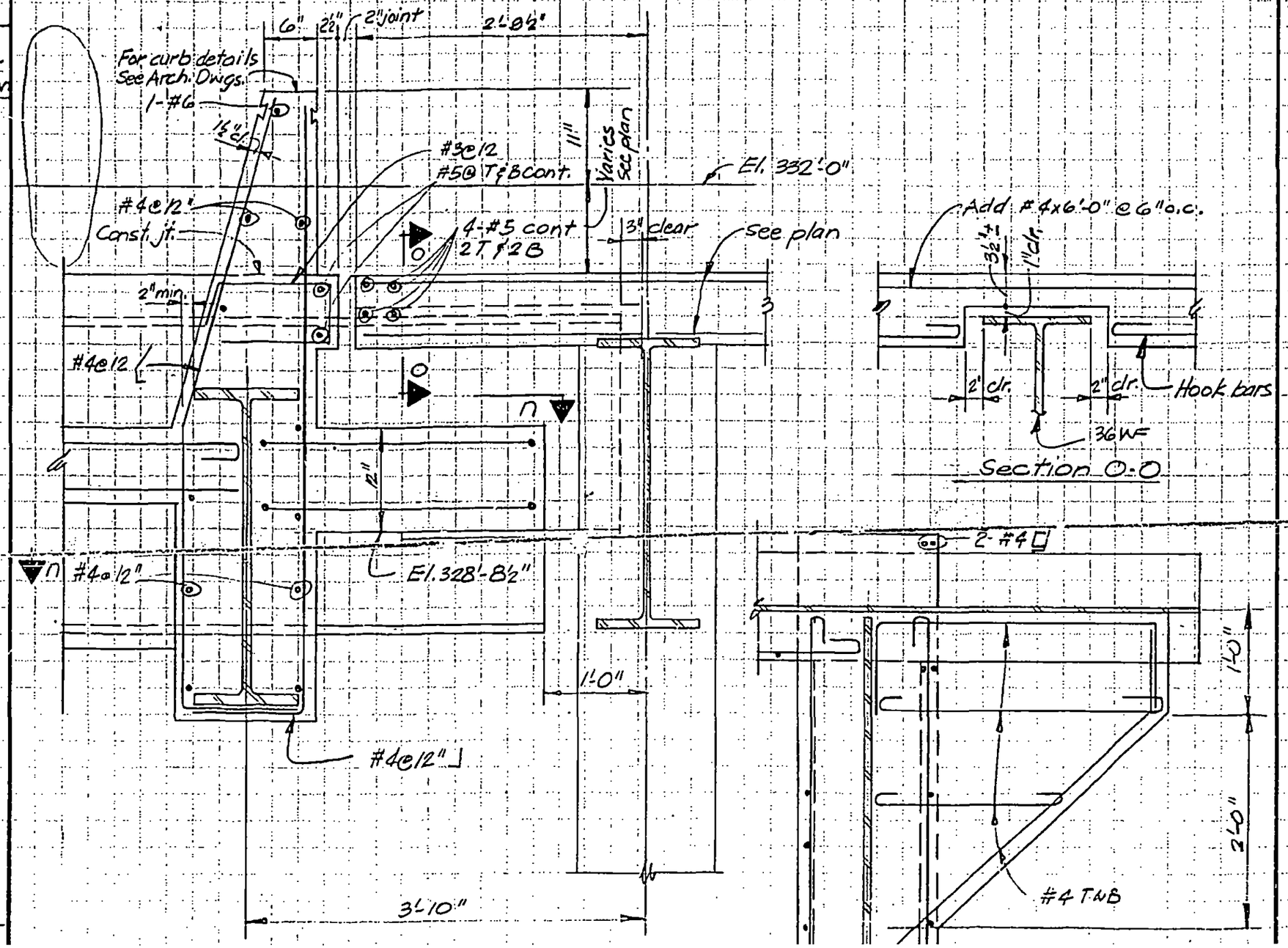

LICENSED PROFESSIONAL ENGINEER
LESLIE E. ROBERTSON
No. 34360
UNIVERSITY OF THE STATE OF NEW YORK

DESIGNED

SKILLING, HELLE, CHRISTIANSEN, ROBERTSON — Structural & Civil Engineers

PROJECT: THE WORLD TRADE CENTER | TITLE: CONCRETE DETAILS - EL 332 | DATE: 3-2-71

REVISIONS

4-9-71 Release for construction

12-[illegible]-72

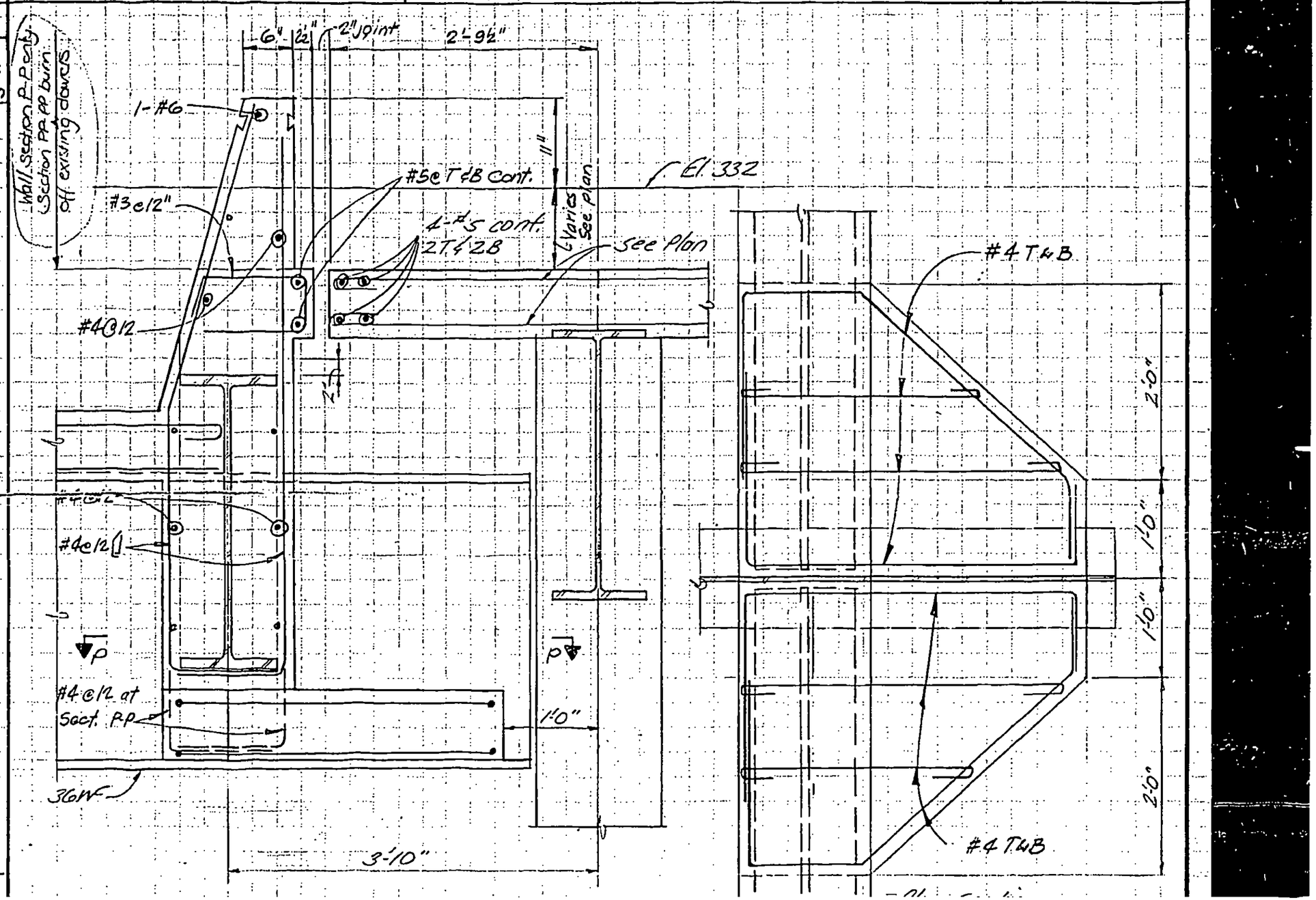

LICENSED PROFESSIONAL ENGINEER
LESLIE E. ROBERTSON
No. 34360
UNIVERSITY OF THE STATE OF NEW YORK

DESIGNED

SKILLING, HELLE, CHRISTIANSEN, ROBERTSON — Structural & Civil Engineers

PROJECT: THE WORLD TRADE CENTER | TITLE: CONCRETE DETAILS - EL. 332 | DATE: 3-2-71

REVISIONS

4-9-71
Release for construction

10-7-71

12-8-72

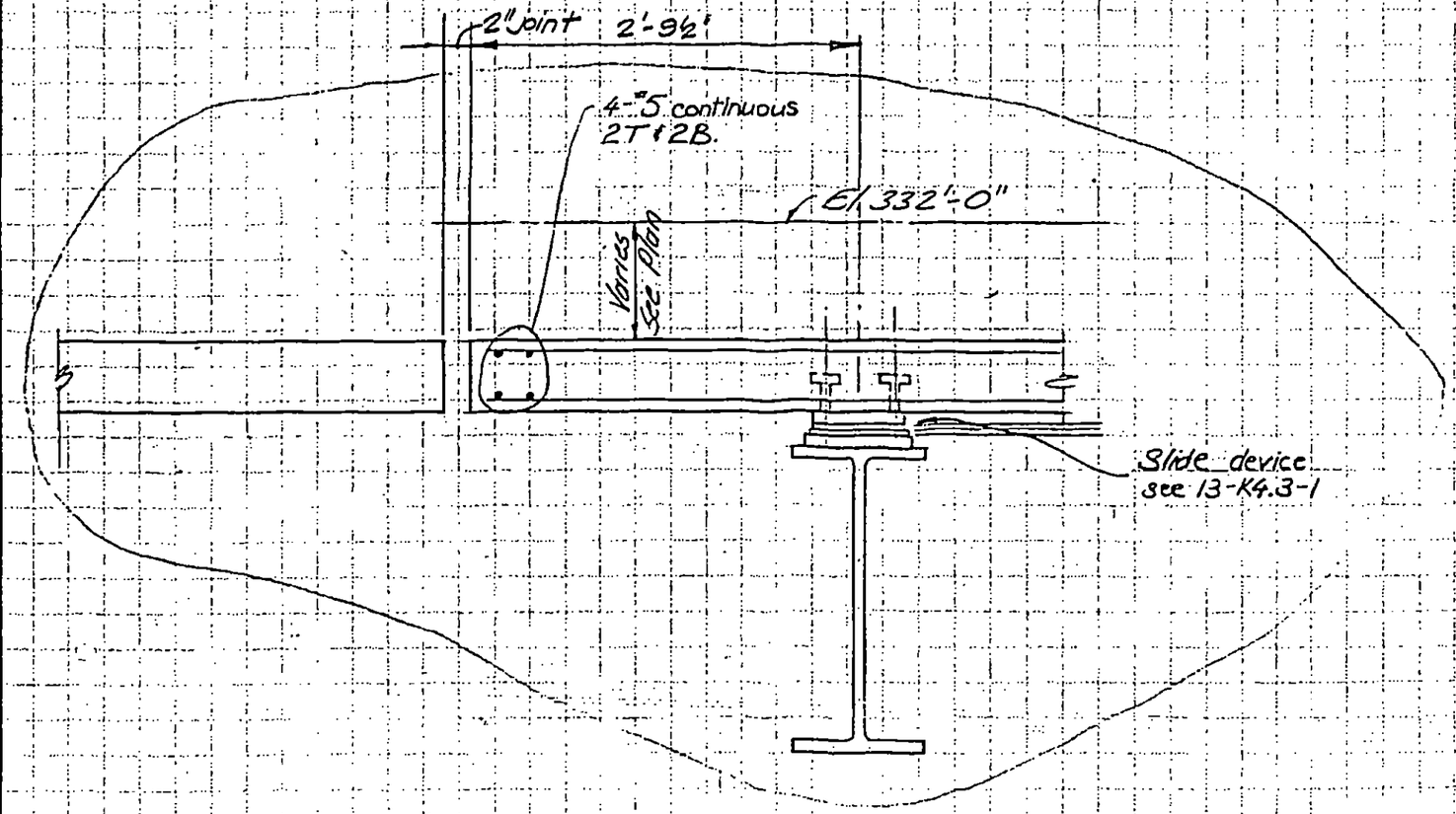

Section Q-Q

LICENSED PROFESSIONAL ENGINEER
LESLIE E. ROBERTSON
No. 34360
UNIVERSITY OF THE STATE OF NEW YORK

DESIGNED H.L.R.o.T.
DRAWN
REVIEWED

8-JKB-57.11

SKILLING, HELLE, CHRISTIANSEN, ROBERTSON — Structural & Civil Engineers

PROJECT THE WORLD TRADE CENTER | TITLE CONCRETE DETAILS - EL. 332 | DATE 4-9-71.

REVISIONS

12/8/72
7/27/73
9-19-73
10-21-74

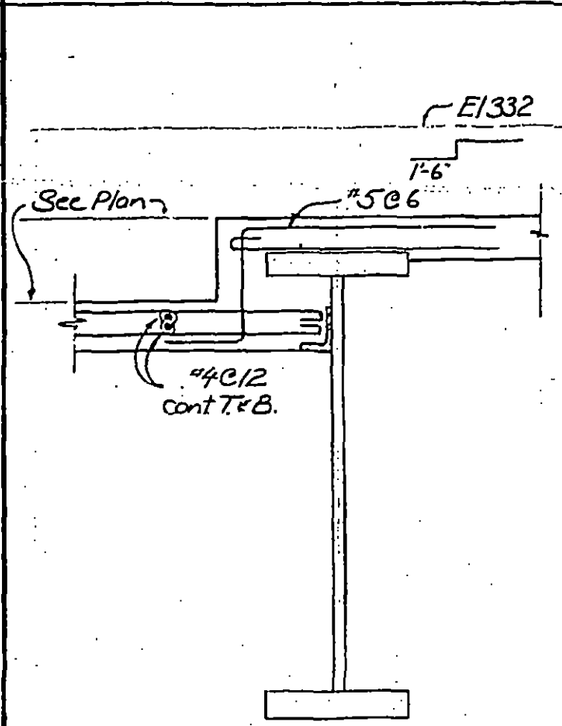

Section X-X

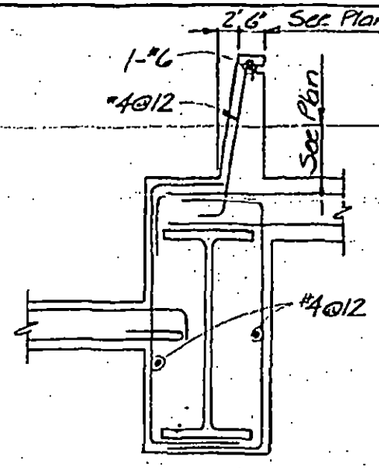

Section Y-Y

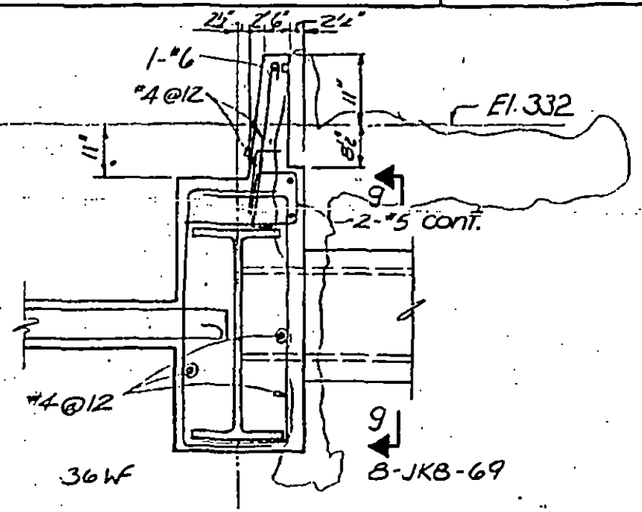

Section Y-Y

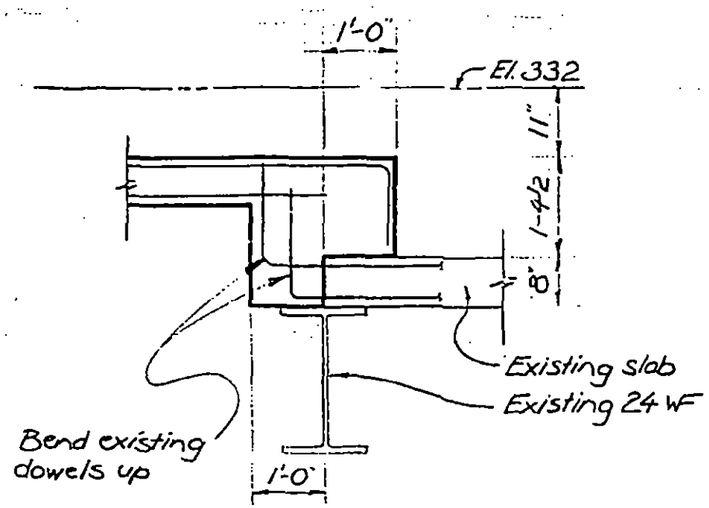

Section Z-Z

LICENSED PROFESSIONAL ENGINEER
LESLIE E. ROBERTSON
No. 34360
UNIVERSITY OF THE STATE OF NEW YORK

DESIGNED WAB
DRAWN J Banks
REVIEWED JTM

8JK8-57.12.

SKILLING, HELLE, CHRISTIANSEN, ROBERTSON — Structural & Civil Engineers

PROJECT: THE WORLD TRADE CENTER | TITLE: CONCRETE DETAILS - EL 332 | DATE: 3-2-71

REVISIONS

4-9-71 Release for construction

10-7-71

1-15-72

12-8-72

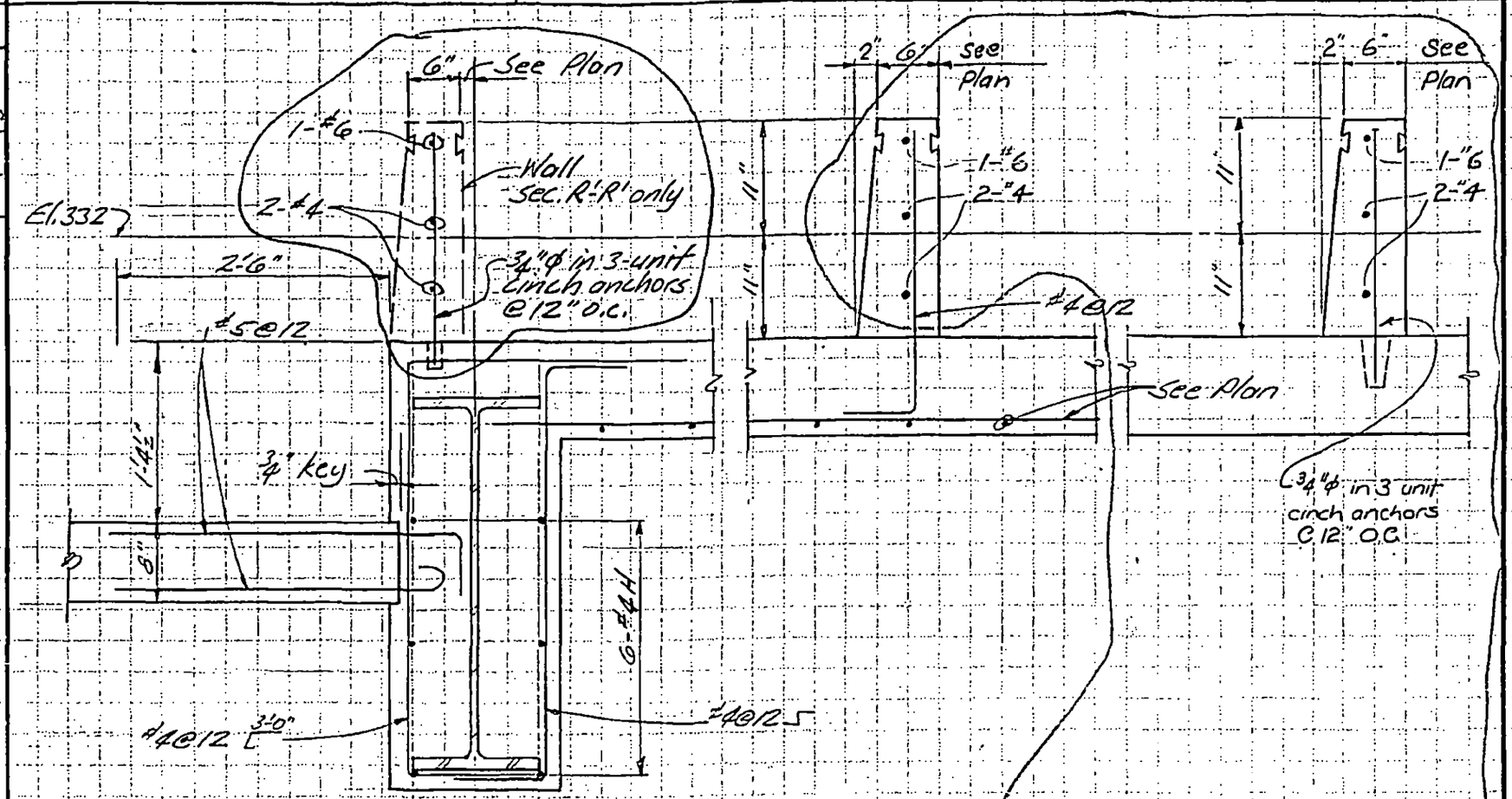

Section R-R

Section R'-R' as noted

Section RR-RR

Section RRR-RRR

LICENSED PROFESSIONAL ENGINEER
LESLIE E. ROBERTSON
No. 34360
UNIVERSITY OF THE STATE OF NEW YORK

DESIGNED

DRAWN

REVIEWED C W Brewer

8-JKB-5713

SKILLING, HELLE, CHRISTIANSEN, ROBERTSON — Structural & Civil Engineers

PROJECT: THE WORLD TRADE CENTER | TITLE: CONCRETE DETAILS - EL. 332 | DATE: 4-9-71

REVISIONS
10-7-71
12-8-72

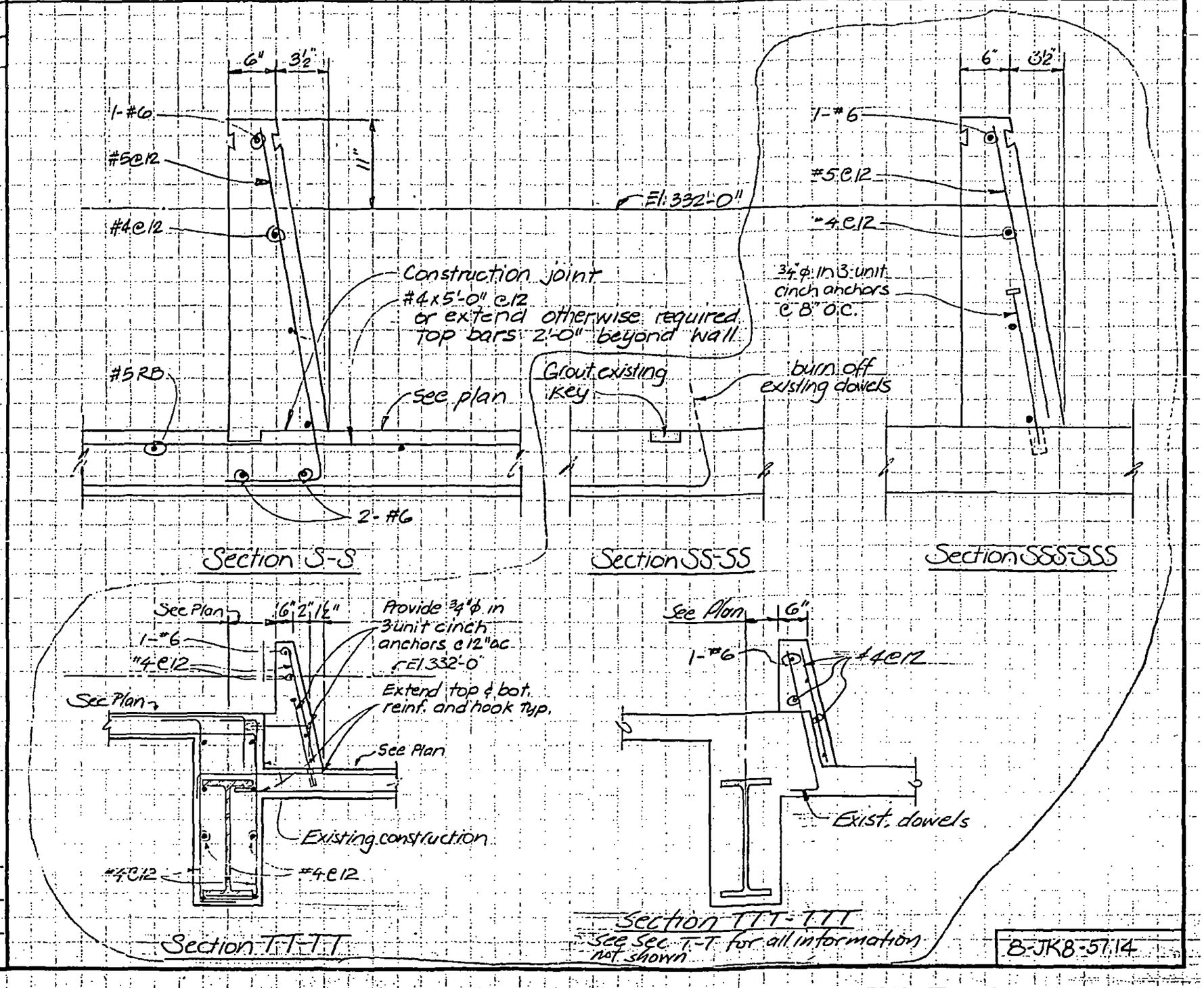

LICENSED PROFESSIONAL ENGINEER
LESLIE E. ROBERTSON
No. 34380
UNIVERSITY OF THE STATE OF NEW YORK

DESIGNED
DRAWN
REVIEWED

8-JKB-57.14

SKILLING, HELLE, CHRISTIANSEN, ROBERTSON · Structural & Civil Engineers

PROJECT THE WORLD TRADE CENTER | TITLE CONCRETE DETAILS EL. 332 | DATE 10-7-71

REVISIONS

12-8-72

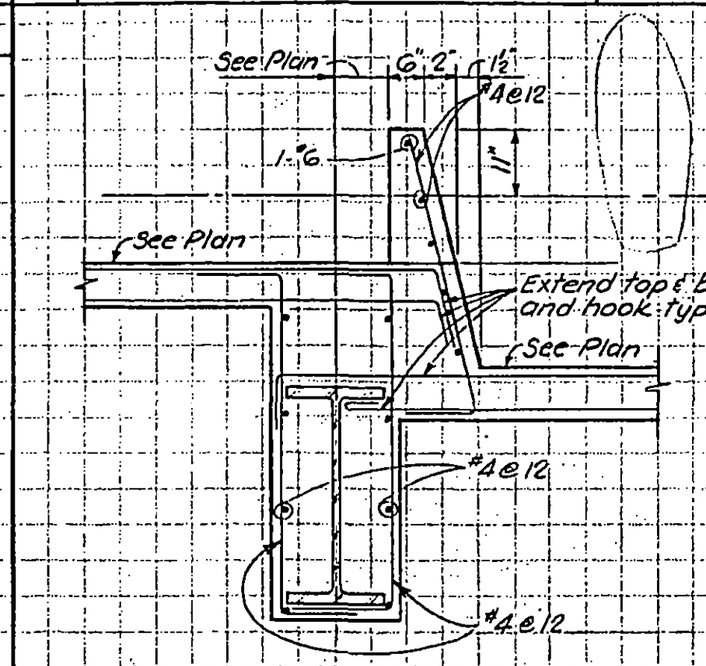

Section T-T

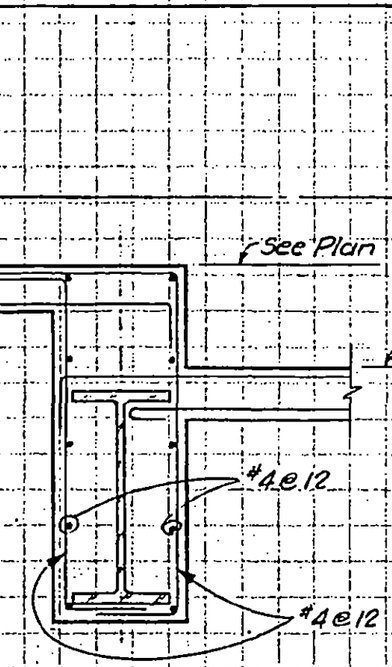

Section U-U

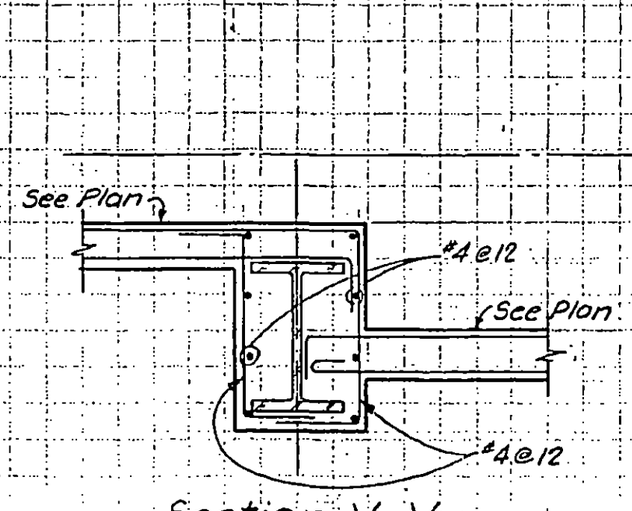

Section V-V

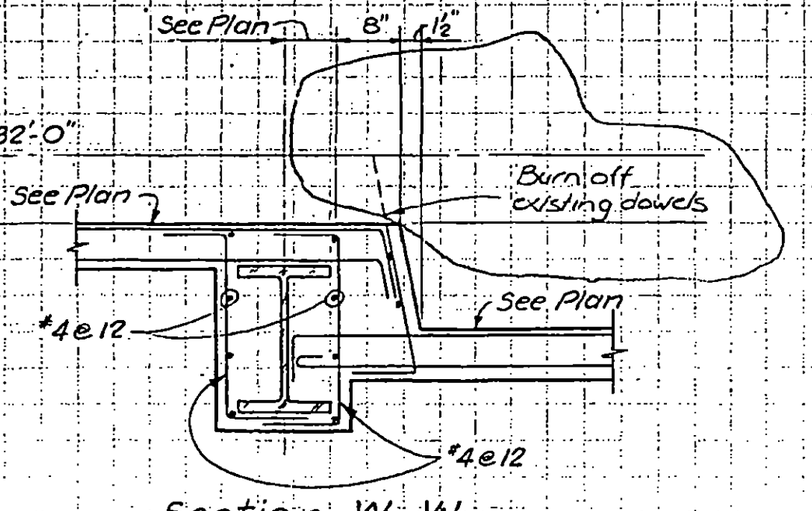

Section W-W

LICENSED PROFESSIONAL ENGINEER
LESLIE E. ROBERTSON
No. 34360
UNIVERSITY OF THE STATE OF NEW YORK

DESIGNED

SKILLING, HELLE, CHRISTIANSEN, ROBERTSON — Structural & Civil Engineers

PROJECT: THE WORLD TRADE CENTER | TITLE: PROCEDURE OF FLOOR CONSTRUCTION @ EL 284 (ZONE J-4) | DATE: 9-30-70

REVISIONS

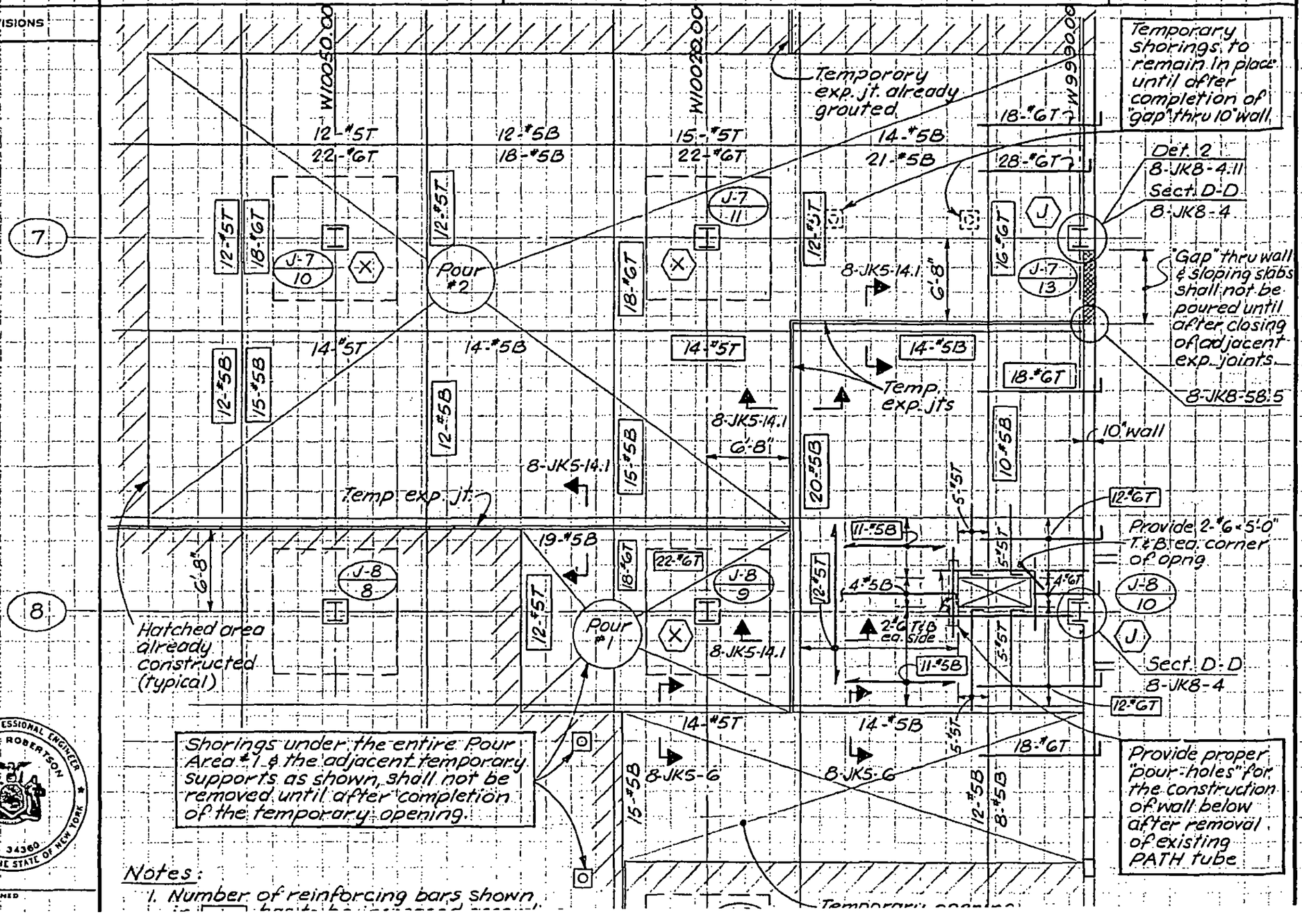

LICENSED PROFESSIONAL ENGINEER — LESLIE E. ROBERTSON — No. 34360 — UNIVERSITY OF THE STATE OF NEW YORK

DESIGNED

Notes:

1. Number of reinforcing bars shown

SKILLING, HELLE, CHRISTIANSEN, ROBERTSON — Structural & Civil Engineers

PROJECT: THE WORLD TRADE CENTER | TITLE: PROCEDURE OF FLOOR CONSTRUCTION @ EL. 290 (ZONE J-4) | DATE: 9-30-70

REVISIONS

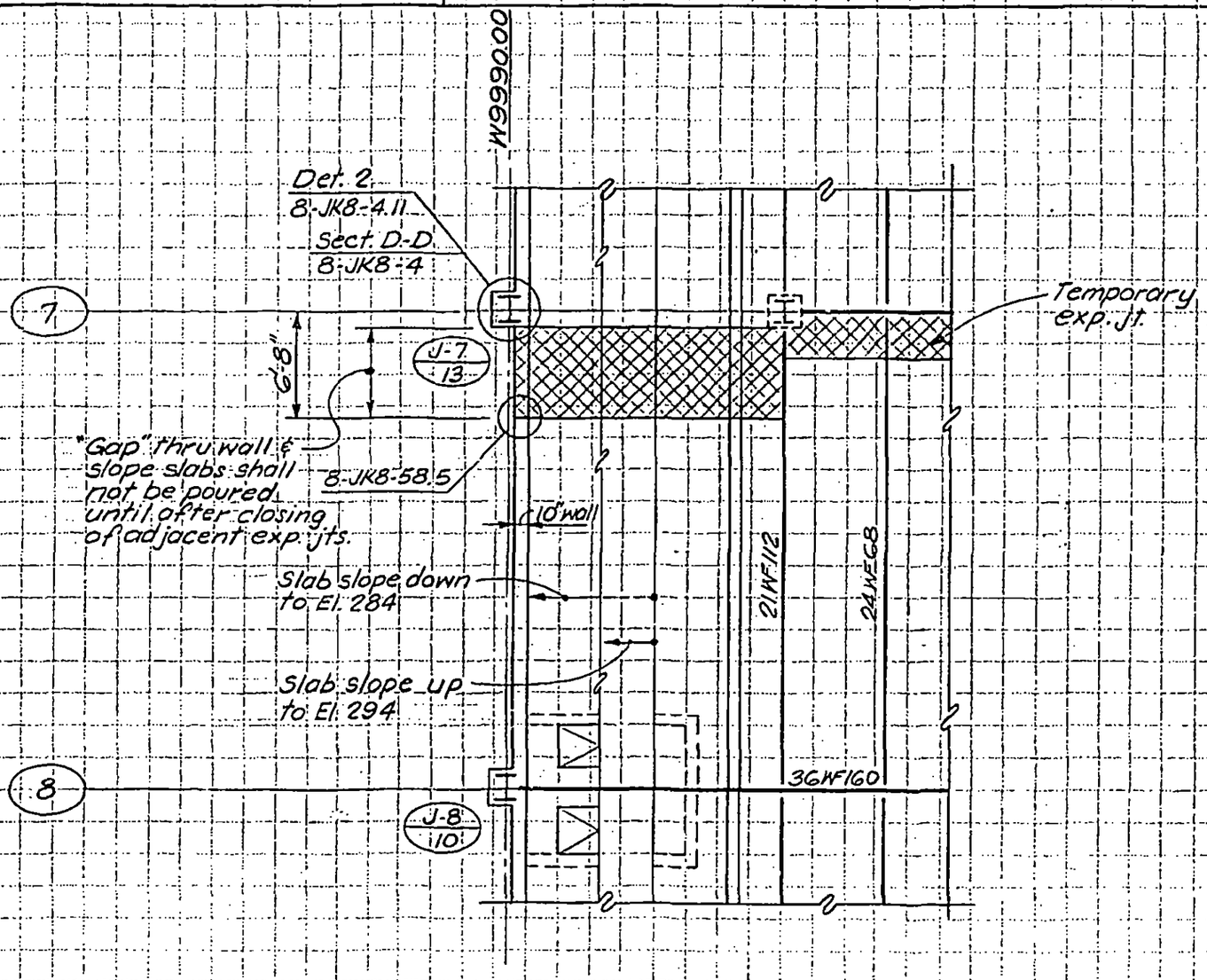

Notes:

1. See SCJ-76 for other information not shown.
2. See also 8-JK8-58.4

LICENSED PROFESSIONAL ENGINEER
LESLIE E. ROBERTSON
No. 34360
UNIVERSITY OF THE STATE OF NEW YORK

DESIGNED

SKILLING, HELLE, CHRISTIANSEN, ROBERTSON — Structural & Civil Engineers

PROJECT: THE WORLD TRADE CENTER

TITLE: PROCEDURE OF FLOOR CONSTRUCTION @ EL. 294 (ZONE J-4)

DATE: 9-30-70

REVISIONS

W100500.00

W100200.00

W99900.00

7

8

Temporary exp. jt. already grouted

14-#6T

24-#6T

13-#6B

19-#6B

16-#6T

30-#6T

22-#6B

33-#6B

24-#6T

2-#9 x 20'-0" @ 4" ea. side of col.

Def. 2
8-JK8-4.11
Sect. D-D
8-JK8-4

J-7/10

J-7/11

J-7/13

V

H

J

11-#5T

8-JK5-14.1

6'-8"

"Gap" thru wall & slab shall not be poured until after closing of adjacent exp. jts.

36-#6T

Pour #2

Pour #3

Pour #1

Temp. exp. jt.

8-JK8-58.5

Shorings along the shaded area shall not be removed until after completion of the temporary opening

8-JK5-6

Temp. exp. jt.

J-8/8

J-8/9

J-8/10

J-9/7

J-9/8

Hatched area already constructed (typical)

Shorings under the entire Pour Area #1 & the adjacent temporary supports as shown, shall not be removed until after completion of the temporary opening.

20-#6B

10" wall (Top @ El. 296'-0")

Temporary Opng. (to be poured only after closing of all adjacent temporary exp. jts.)

17-#6B

12-#6B

7-#5S

8-JK8-58.3

Notes:

1. Number of reinforcing bars shown in ▭ has to be increased according to detail shown on 8-JK5-14.1
2. See SCJ-82 for other information not shown on this dwg.
3. See also 8-JK8-58.4

LICENSED PROFESSIONAL ENGINEER — LESLIE E. ROBERTSON — No. 34360 — UNIVERSITY OF THE STATE OF NEW YORK

DESIGNED

DRAWN: S.C.

REVIEWED: E.L.

SKILLING, HELLE, CHRISTIANSEN, ROBERTSON — Structural & Civil Engineers

PROJECT: THE WORLD TRADE CENTER

TITLE: LIVE LOAD RESTRICTION AT EL. 310 (ZONE J-4) DUE TO THE HANGING OF FORMWORK FROM FLOORS BELOW

DATE: 9-30-70

REVISIONS

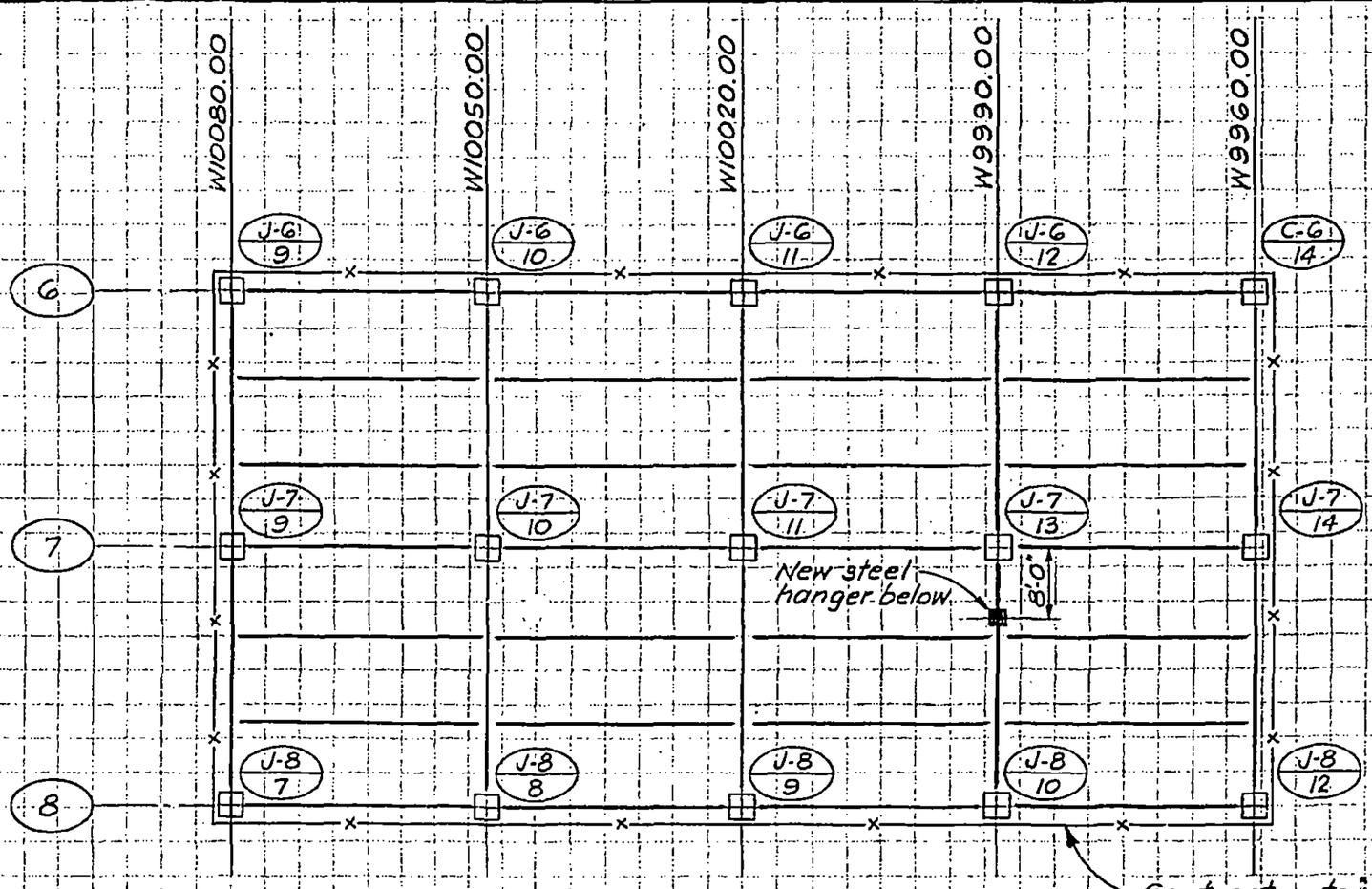

Part Plan at El. 310

Contractor to "Fence-Off" the entire area as shown to restrict any live load into this area. This restriction shall not be lifted until after removal of all formwork hanger-rods and the steel hanger below. Contractor to submit formwork "hanger-rod" details for approval.

LICENSED PROFESSIONAL ENGINEER — LESLIE E. ROBERTSON — No. 34360 — UNIVERSITY OF THE STATE OF NEW YORK

DESIGNED

DRAWN S.C.

REVIEWED E.L.

8-JK8-58.4

SKILLING, HELLE, CHRISTIANSEN, ROBERTSON — Structural & Civil Engineers

PROJECT: THE WORLD TRADE CENTER | TITLE: DETAILS | DATE: 9-30-70

REVISIONS

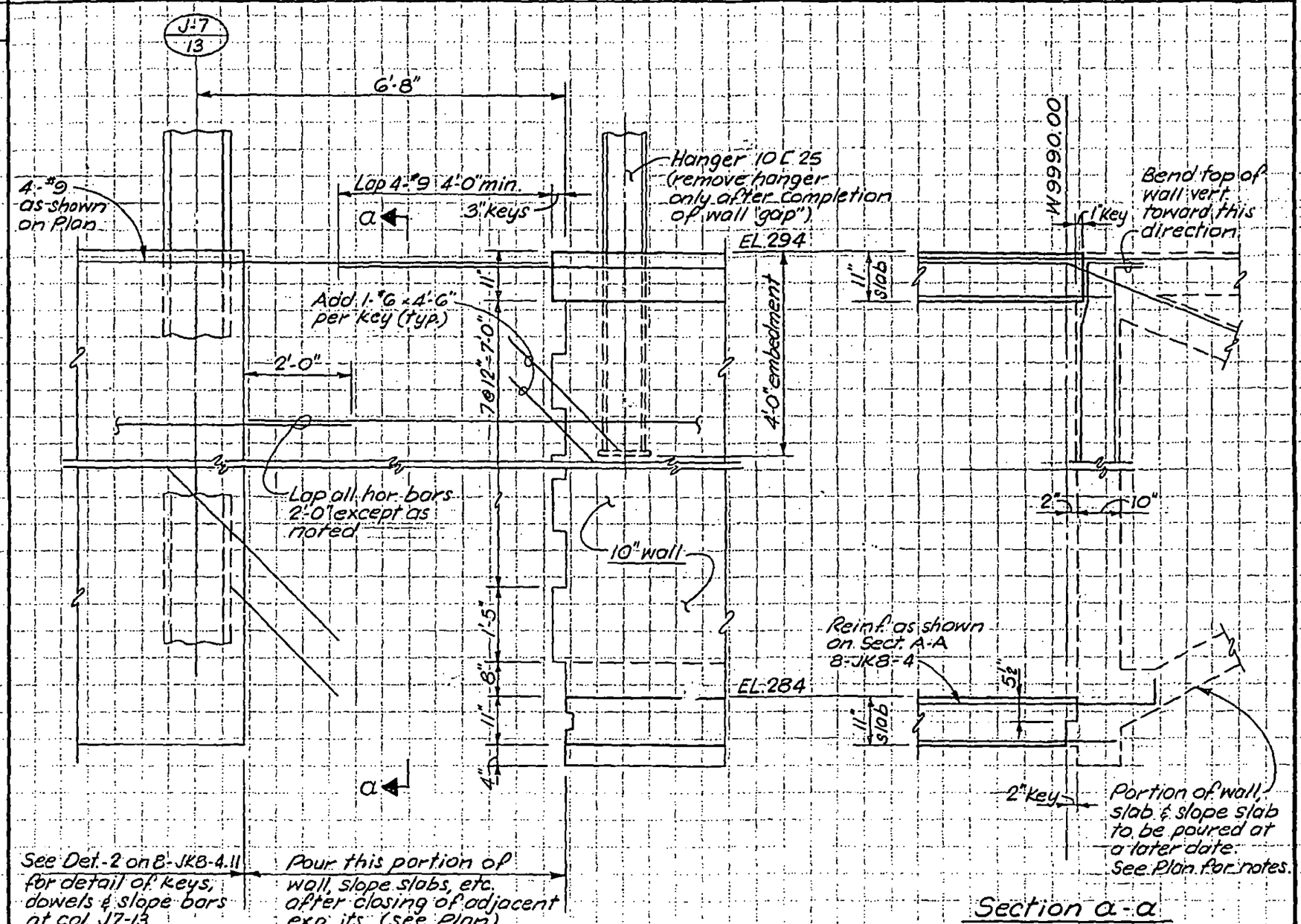

Section a-a

LICENSED PROFESSIONAL ENGINEER — LESLIE E. ROBERTSON — No. 34360 — UNIVERSITY OF THE STATE OF NEW YORK

DESIGNED

DRAWN S.C.

REVIEWED E.I.

8-JK8-58.5

SKILLING, HELLE, CHRISTIANSEN, ROBERTSON — Structural & Civil Engineers

PROJECT: THE WORLD TRADE CENTER | TITLE: SECTIONS AT EL. 310 - ZONE K-5 | DATE: 1-15-71

REVISIONS

6-15-73

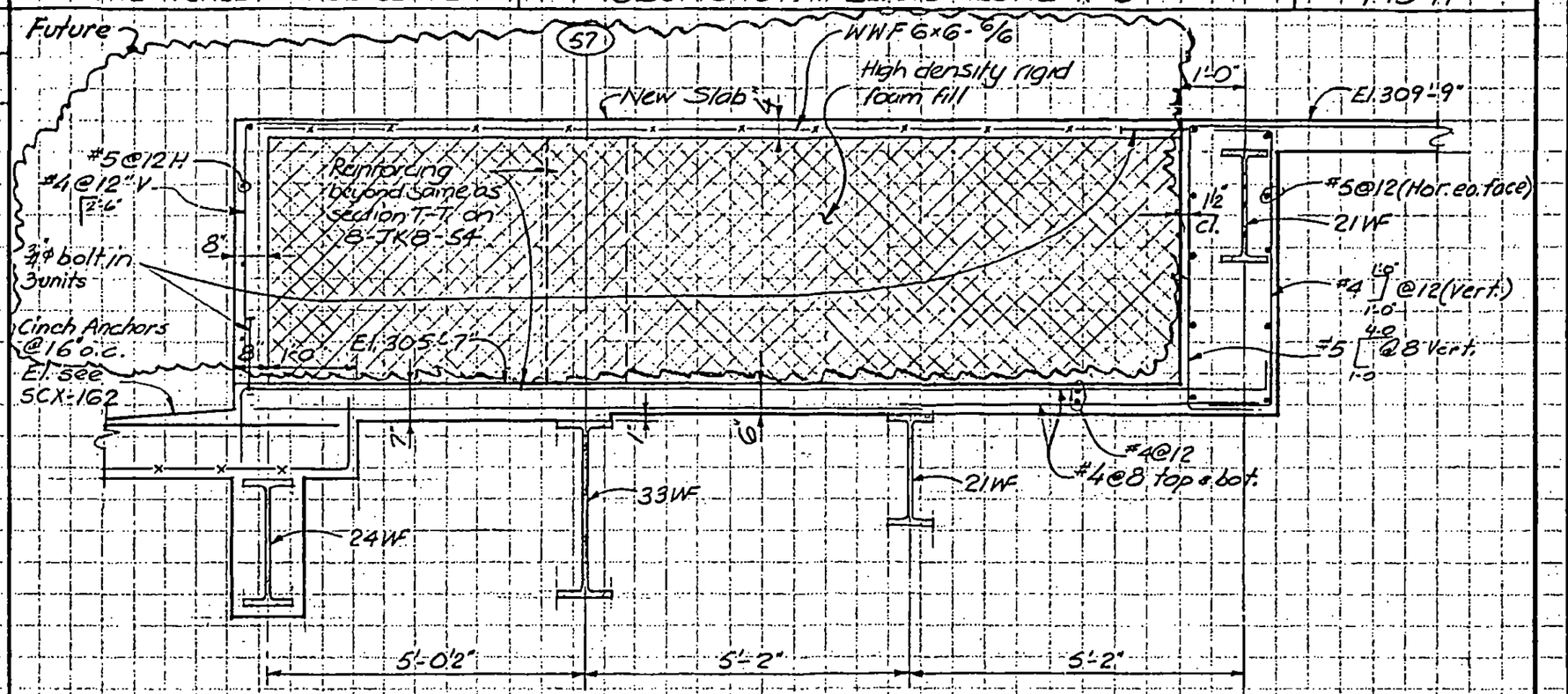

Section A-A

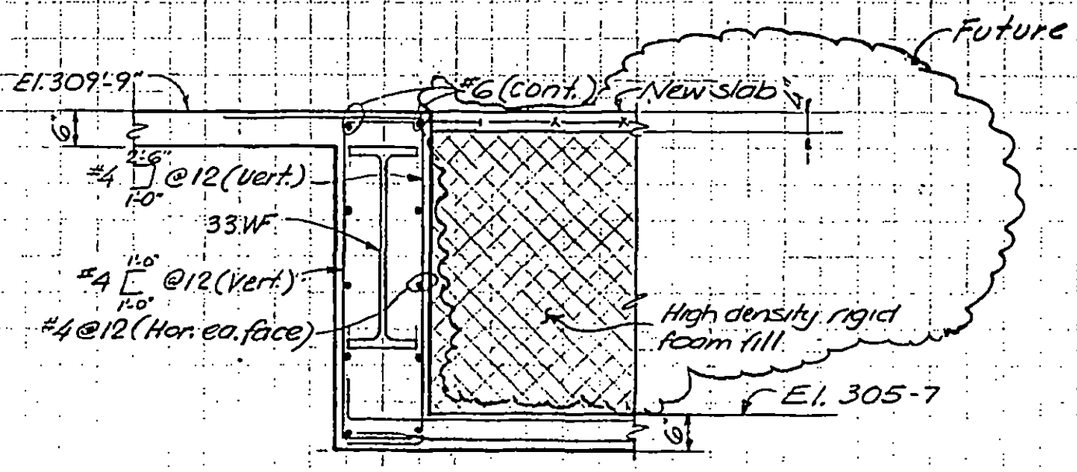

LICENSED PROFESSIONAL ENGINEER
LESLIE E. ROBERTSON
No. 34380
UNIVERSITY OF THE STATE OF NEW YORK

DESIGNED
K. CHIANG

SKILLING, HELLE, CHRISTIANSEN, ROBERTSON — Structural & Civil Engineers

PROJECT: THE WORLD TRADE CENTER | TITLE: SECTIONS AT EL. 310 - ZONE K-5 | DATE: 1-15-71

REVISIONS

6-15-73

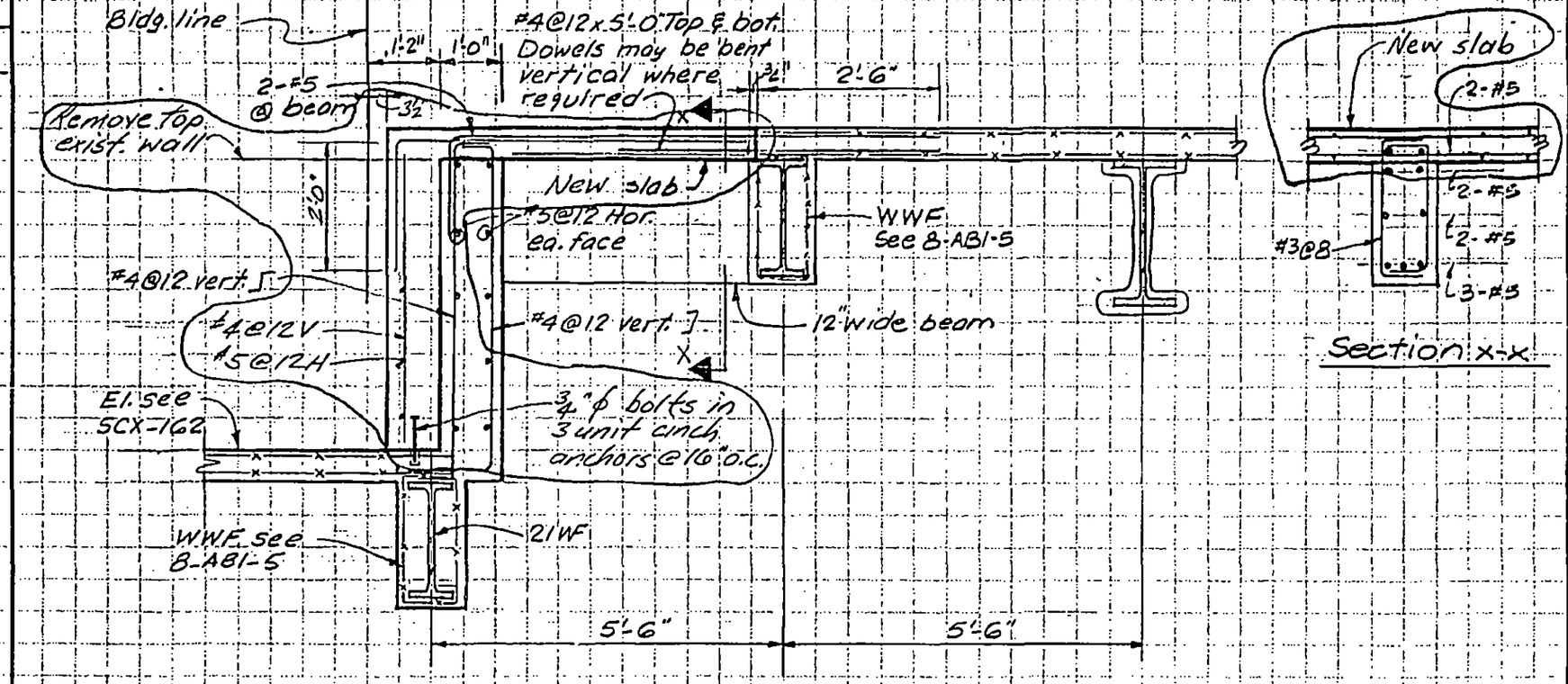

Section C-C

Section X-X

LICENSED PROFESSIONAL ENGINEER
LESLIE E. ROBERTSON
No. 34360
UNIVERSITY OF THE STATE OF NEW YORK

DESIGNED K. CHIANG

DRAWN A. FRANQUI

REVIEWED WAB

8-JK8-59.2

SKILLING, HELLE, CHRISTIANSEN, ROBERTSON — Structural & Civil Engineers

PROJECT: THE WORLD TRADE CENTER | TITLE: SECTIONS AT EL. 310 – ZONE K-3, K-5 | DATE: 1-15-71

REVISIONS
9-20-71
6-15-73

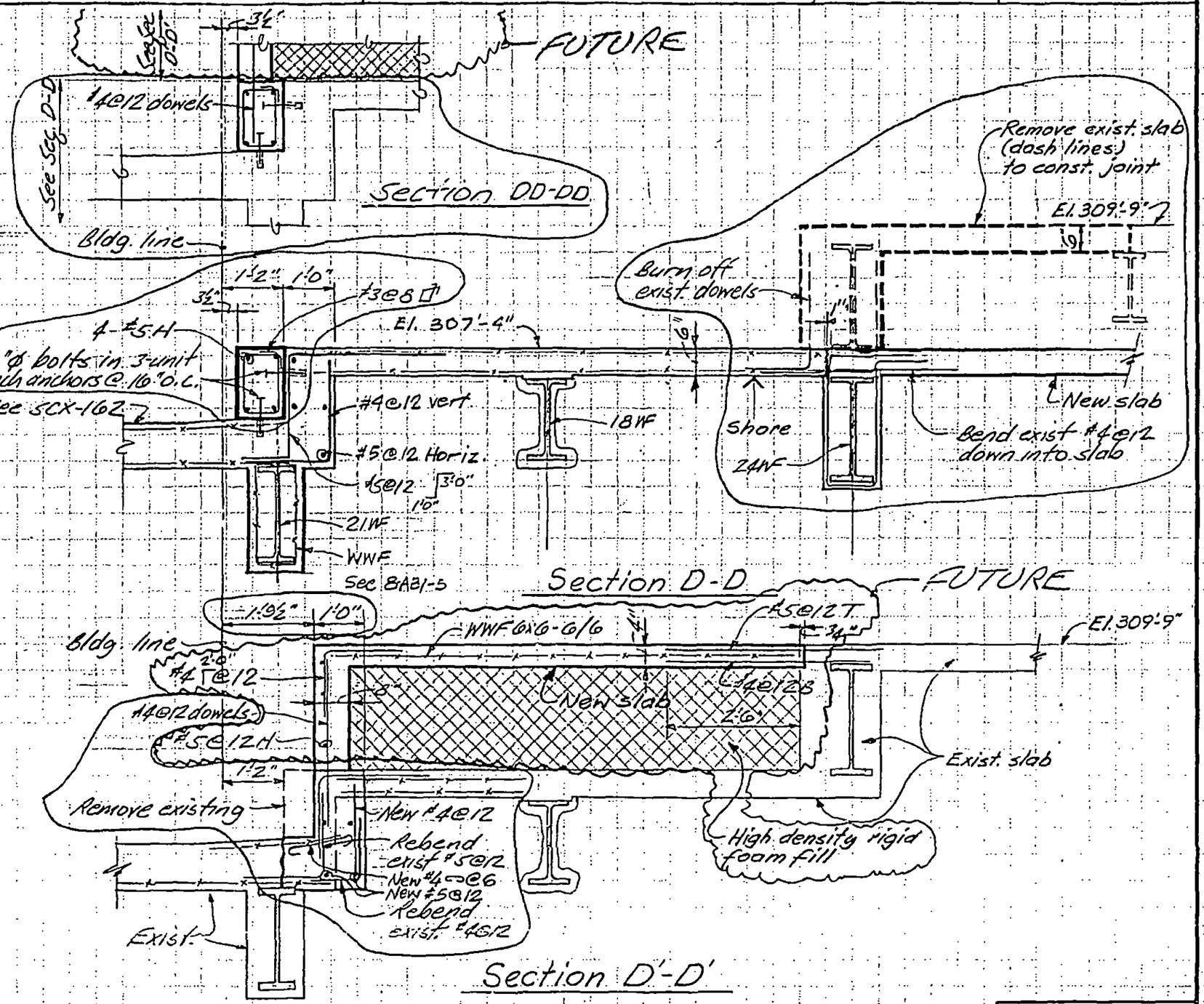

LICENSED PROFESSIONAL ENGINEER — LESLIE E. ROBERTSON — No. 34360 — UNIVERSITY OF THE STATE OF NEW YORK

DESIGNED: K. CHIANG
DRAWN: A. FRANQUI
REVIEWED: WOR

8-JK8-59.3

SKILLING, HELLE, CHRISTIANSEN, ROBERTSON — Structural & Civil Engineers

PROJECT: THE WORLD TRADE CENTER | TITLE: SECTIONS AT EL. 310 – ZONE K-5 | DATE: 1-15-71

REVISIONS
9-15-71
6-15-73

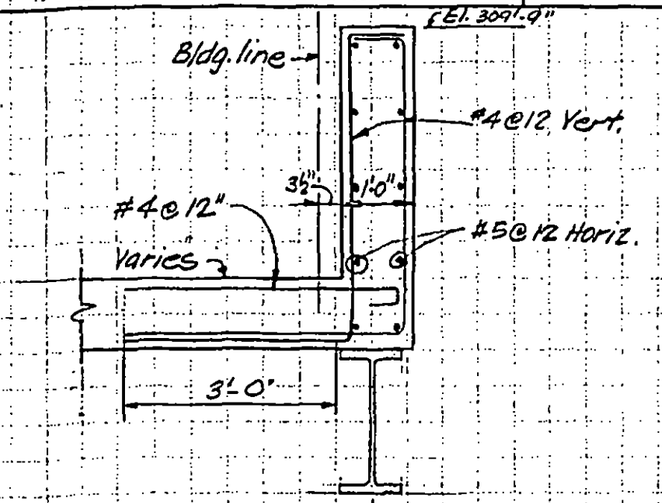

Section E-E

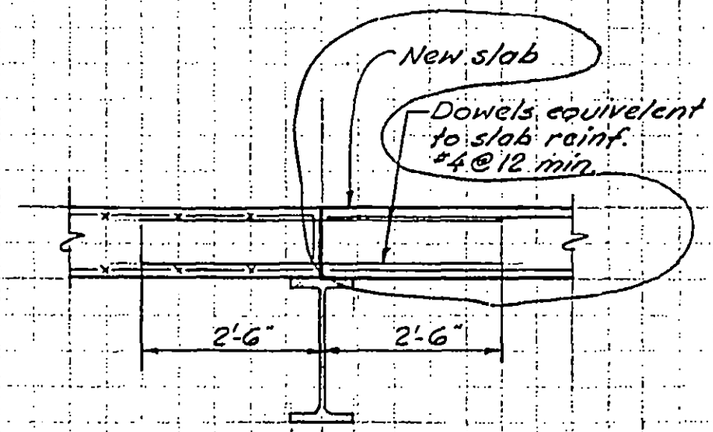

Section F-F

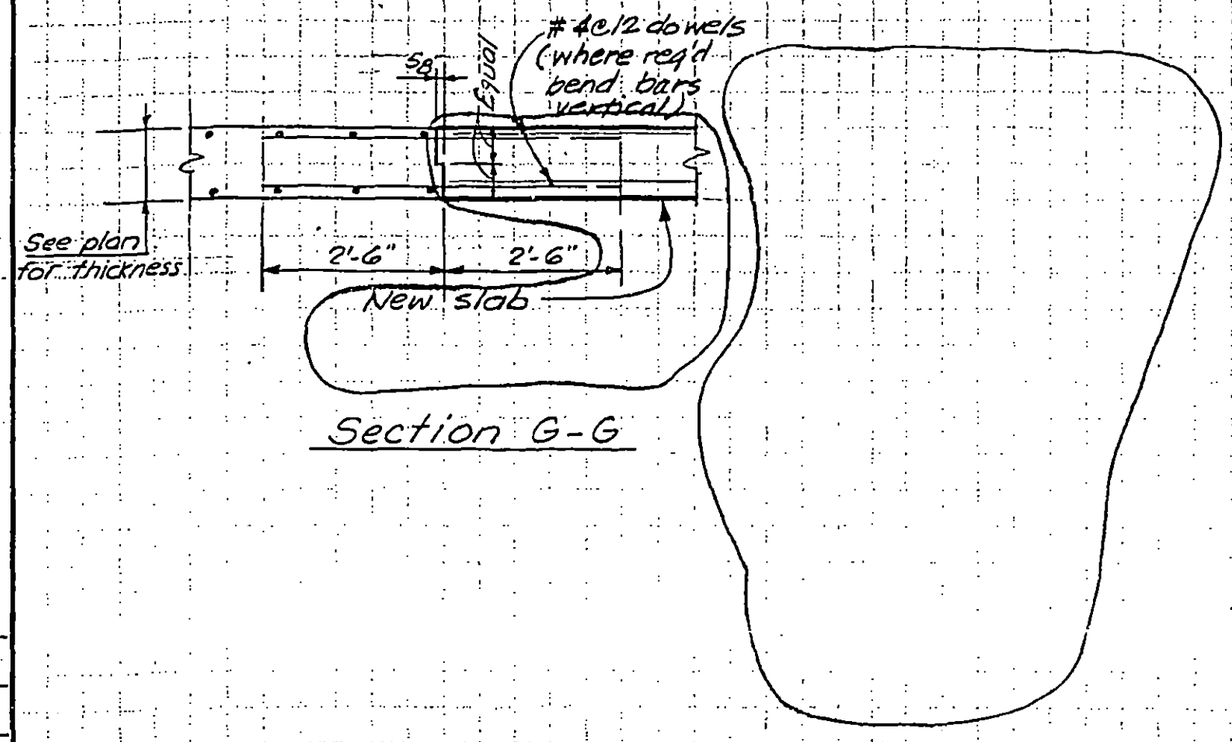

Section G-G

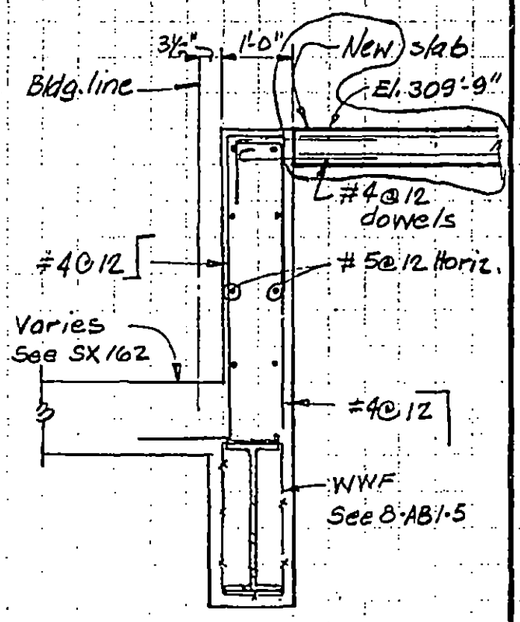

Section K-K

LICENSED PROFESSIONAL ENGINEER — LESLIE E. ROBERTSON — No. 34360 — UNIVERSITY OF THE STATE OF NEW YORK

DESIGNED K. CHIANG
DRAWN A. FRANQUI
REVIEWED Wab

8-JK8-59.4

SKILLING, HELLE, CHRISTIANSEN, ROBERTSON — Structural & Civil Engineers

PROJECT: THE WORLD TRADE CENTER | TITLE: SECTIONS EL 310 | DATE: 9-15-71

REVISIONS
9-20-71
3-10-72
6-15-73

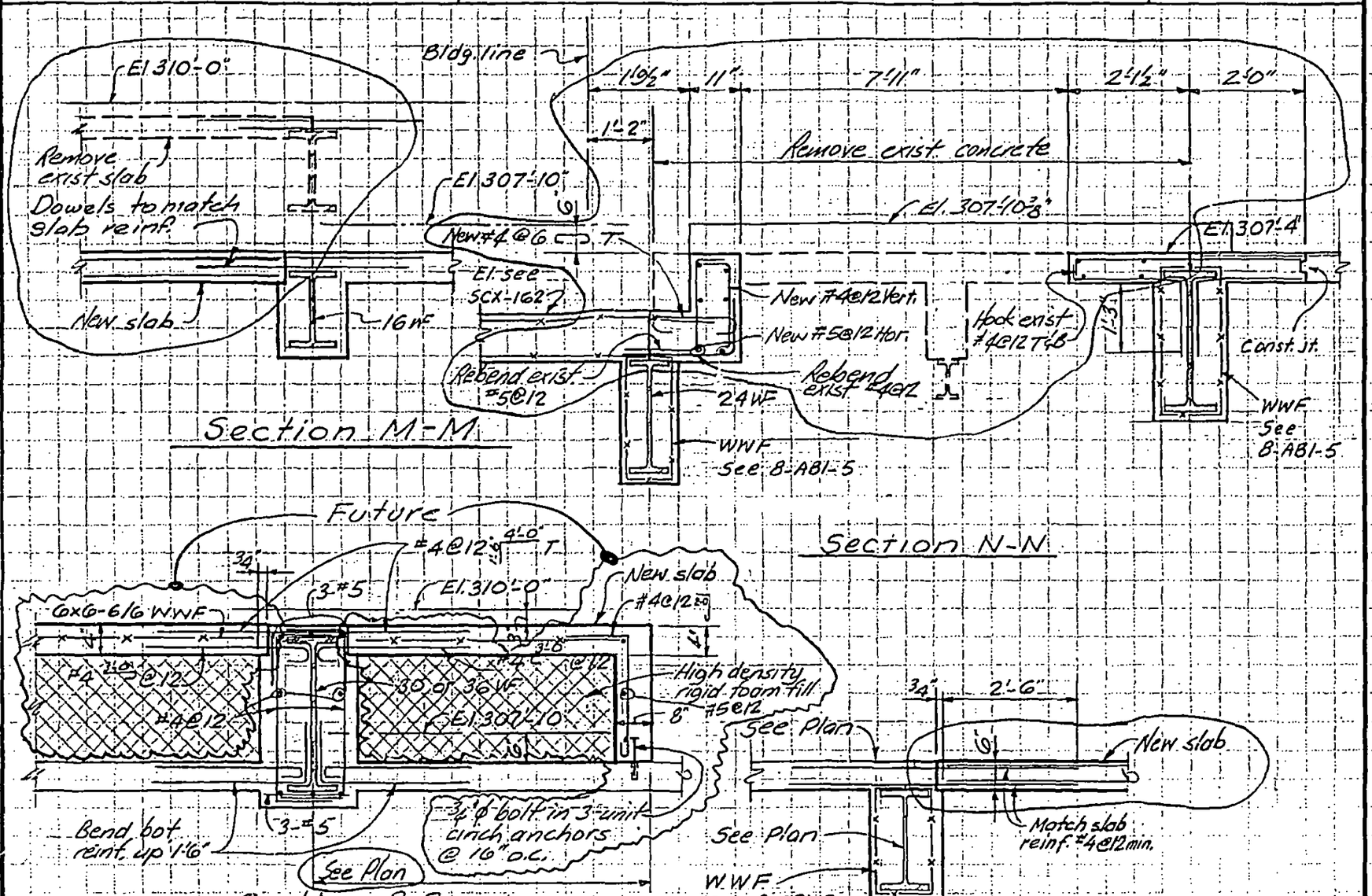

LICENSED PROFESSIONAL ENGINEER — LESLIE E. ROBERTSON — No. 34360 — UNIVERSITY OF THE STATE OF NEW YORK

DESIGNED

DRAWN J.G.

REVIEWED LEAR

8-JK8-59.5

SKILLING, HELLE, CHRISTIANSEN, ROBERTSON — Structural & Civil Engineers

PROJECT THE WORLD TRADE CENTER | TITLE SECTIONS EL 310 | DATE 9-20-71

REVISIONS

6-15-73

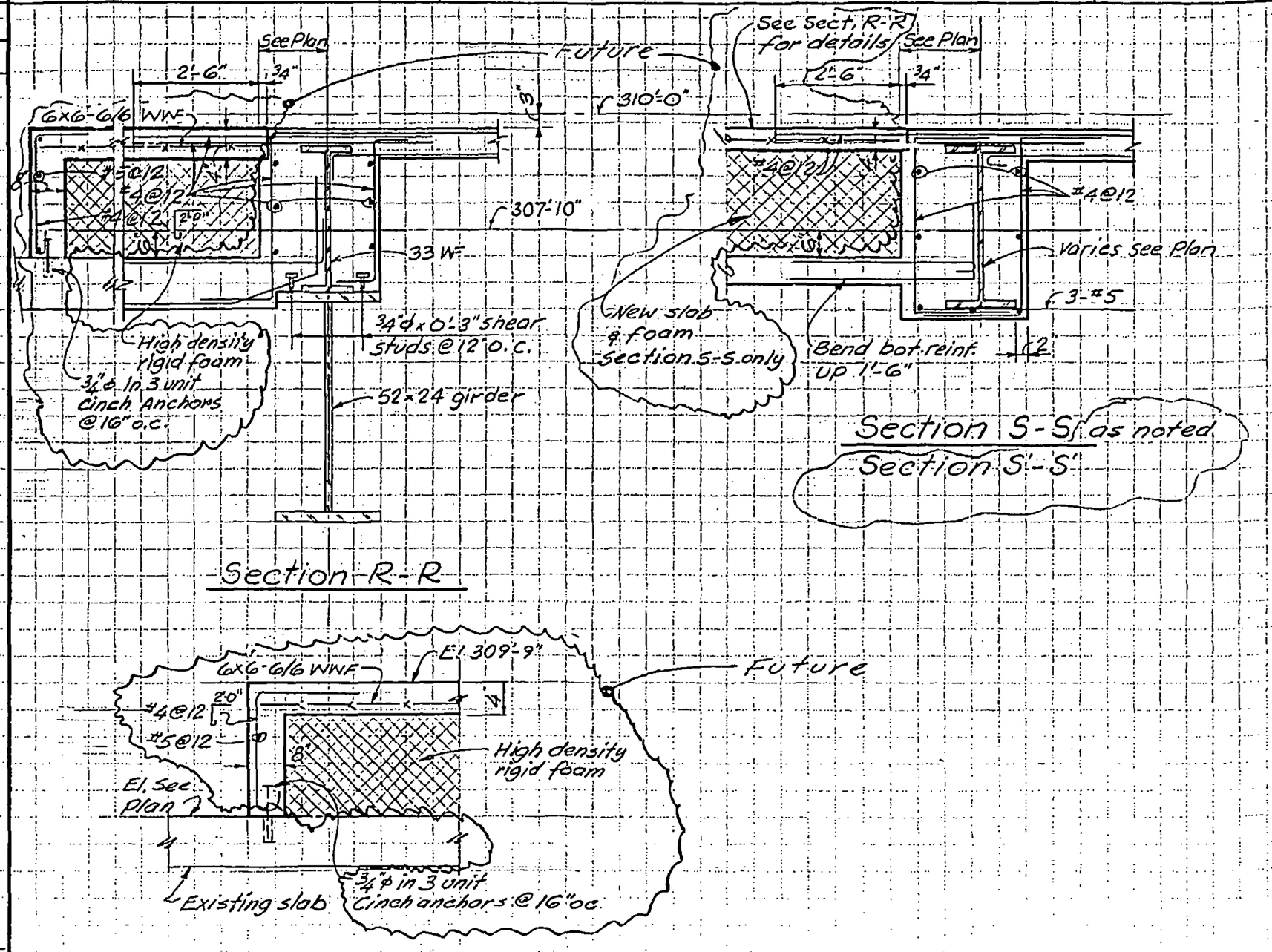

Section R-R

Section RR-RR

LICENSED PROFESSIONAL ENGINEER
LESLIE E. ROBERTSON
No. 34360
UNIVERSITY OF THE STATE OF NEW YORK

DESIGNED

SKILLING, HELLE, CHRISTIANSEN, ROBERTSON — Structural & Civil Engineers

PROJECT: THE WORLD TRADE CENTER | TITLE: SECTIONS - EL. 310 - ZONE K3 | DATE: 3-10-72

REVISIONS

6-15-73

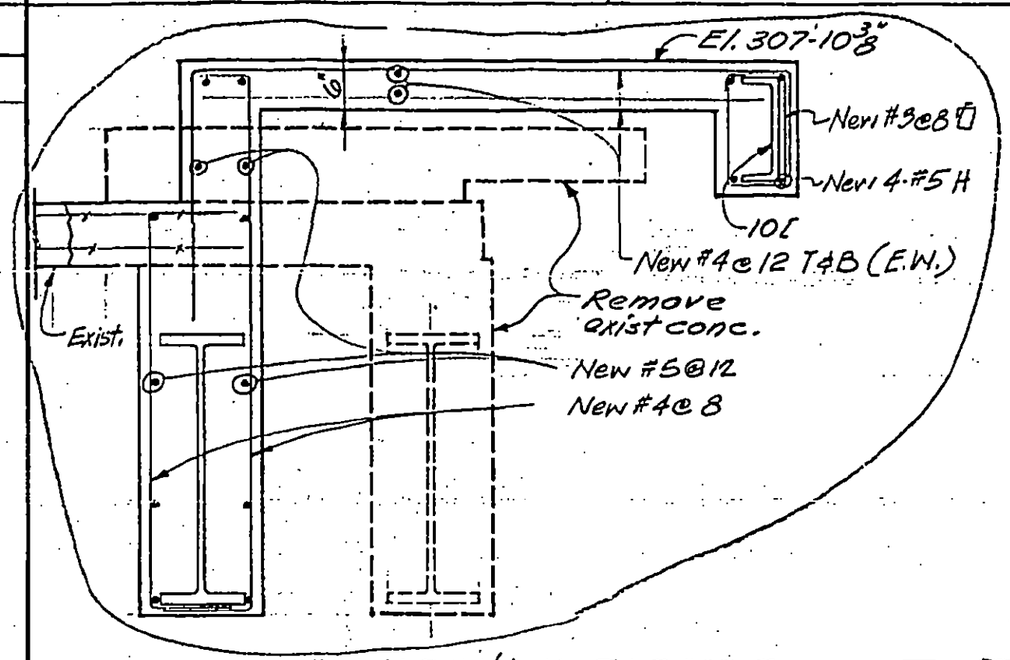

Section T-T

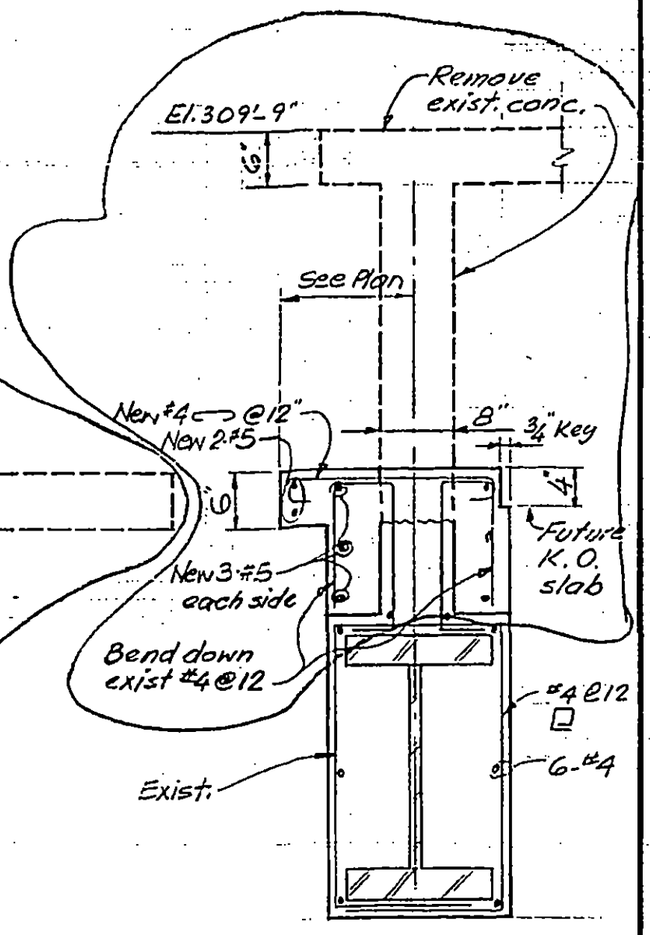

Section W-W

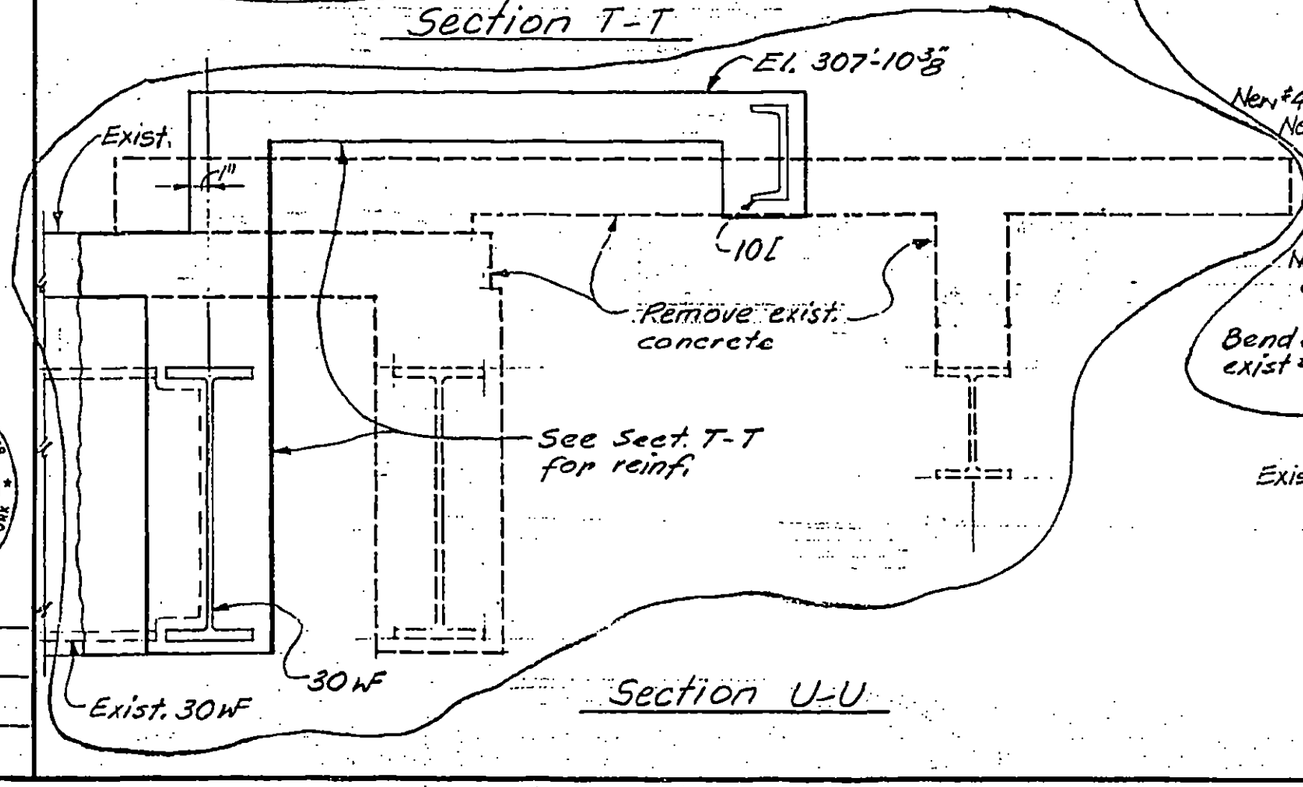

Section U-U

LICENSED PROFESSIONAL ENGINEER — LESLIE E. ROBERTSON — No 34360 — UNIVERSITY OF THE STATE OF NEW YORK

DESIGNED K. Chiang

DRAWN A. Franqui

REVIEWED

8-JK8-59.7

SKILLING, HELLE, CHRISTIANSEN, ROBERTSON — Structural & Civil Engineers

PROJECT: THE WORLD TRADE CENTER | TITLE: DUMBWAITER SHAFT | DATE: 2-17-71

REVISIONS

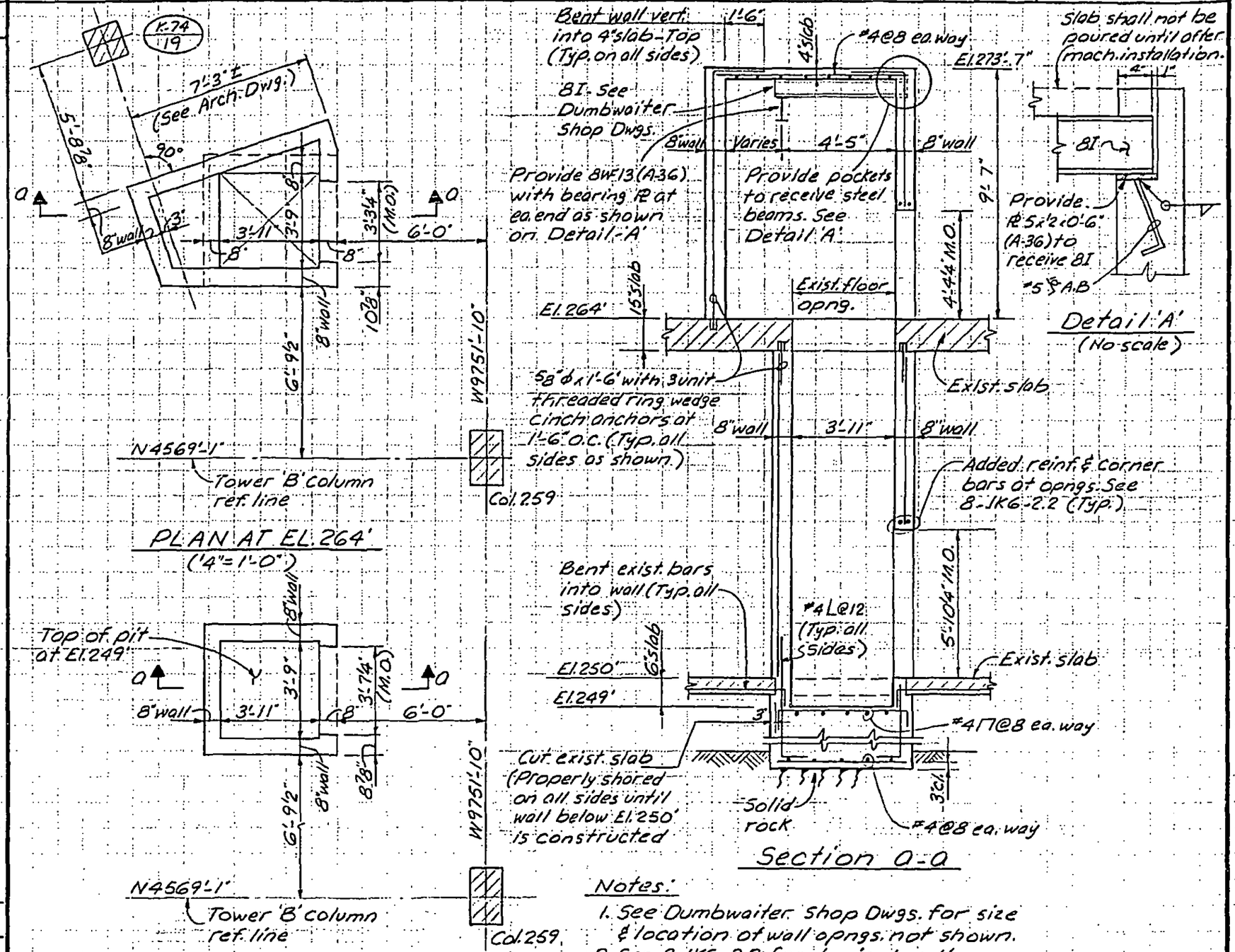

Notes:

1. See Dumbwaiter Shop Dwgs. for size & location of wall opngs. not shown.
2. See 8-1K6-2.2 for typical wall reinforcements.

LICENSED PROFESSIONAL ENGINEER — LESLIE E. ROBERTSON — No. 34360 — UNIVERSITY OF THE STATE OF NEW YORK

DESIGNED: E. LIU

DRAWN: A. FRANQUI

REVIEWED:

8-1K8-60

SKILLING, HELLE, CHRISTIANSEN, ROBERTSON — Structural & Civil Engineers

PROJECT: THE WORLD TRADE CENTER | TITLE: SECTIONS - ELEVATION 320 | DATE: 1-15-72

REVISIONS

10/10/72

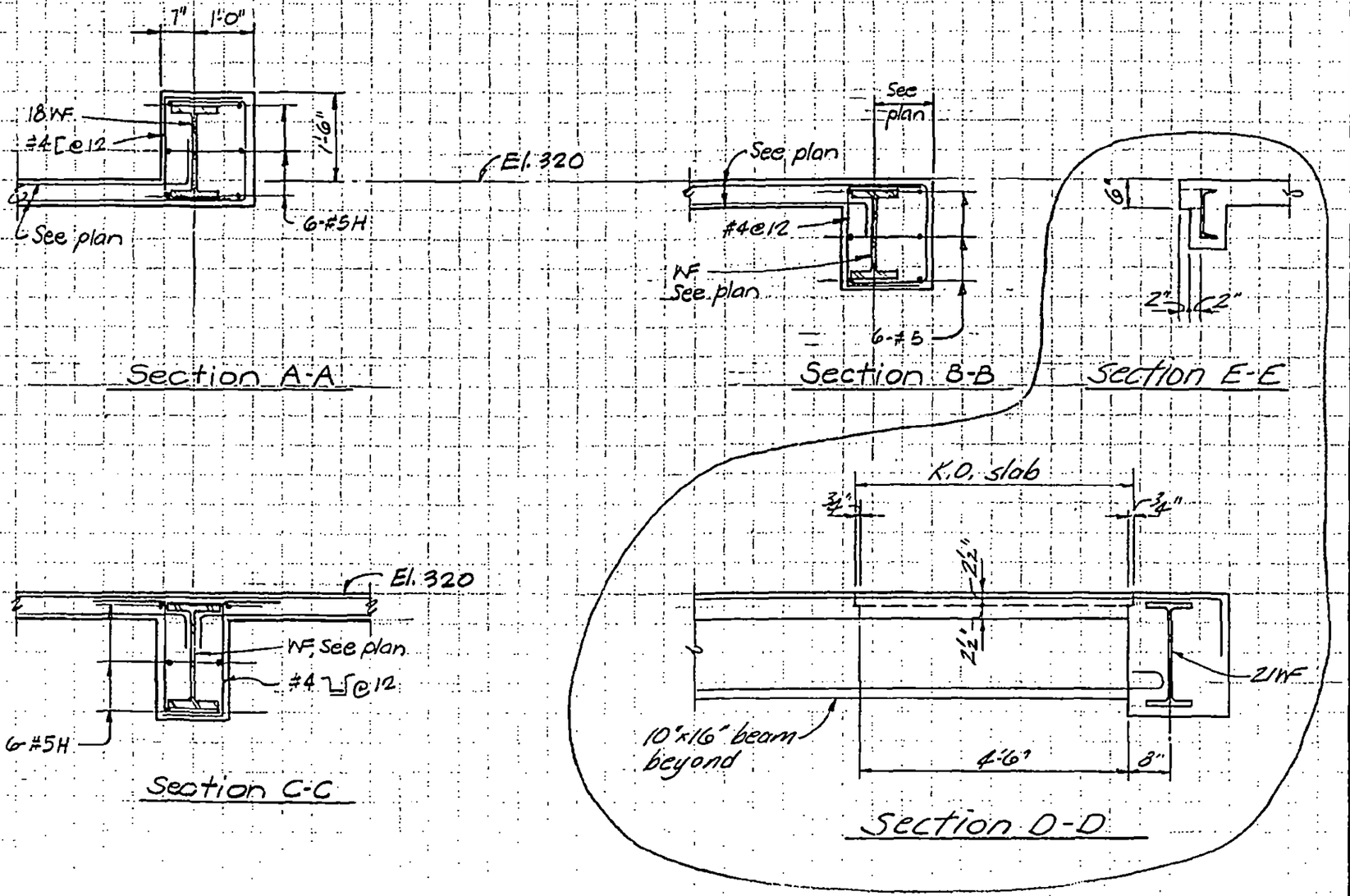

LICENSED PROFESSIONAL ENGINEER — LESLIE E. ROBERTSON — No. 34360 — UNIVERSITY OF THE STATE OF NEW YORK

DESIGNED

DRAWN: P.M. Orelli

REVIEWED: W. Brewer

8-JKB-61

SKILLING, HELLE, CHRISTIANSEN, ROBERTSON — Structural & Civil Engineers

PROJECT: THE WORLD TRADE CENTER | TITLE: SECTIONS-PARKING ELEVATOR-ZONE K3-EL.294 | DATE: 12-28-71

REVISIONS

1-15-72 Gen. Rev.

3-10-72 Gen. Rev.

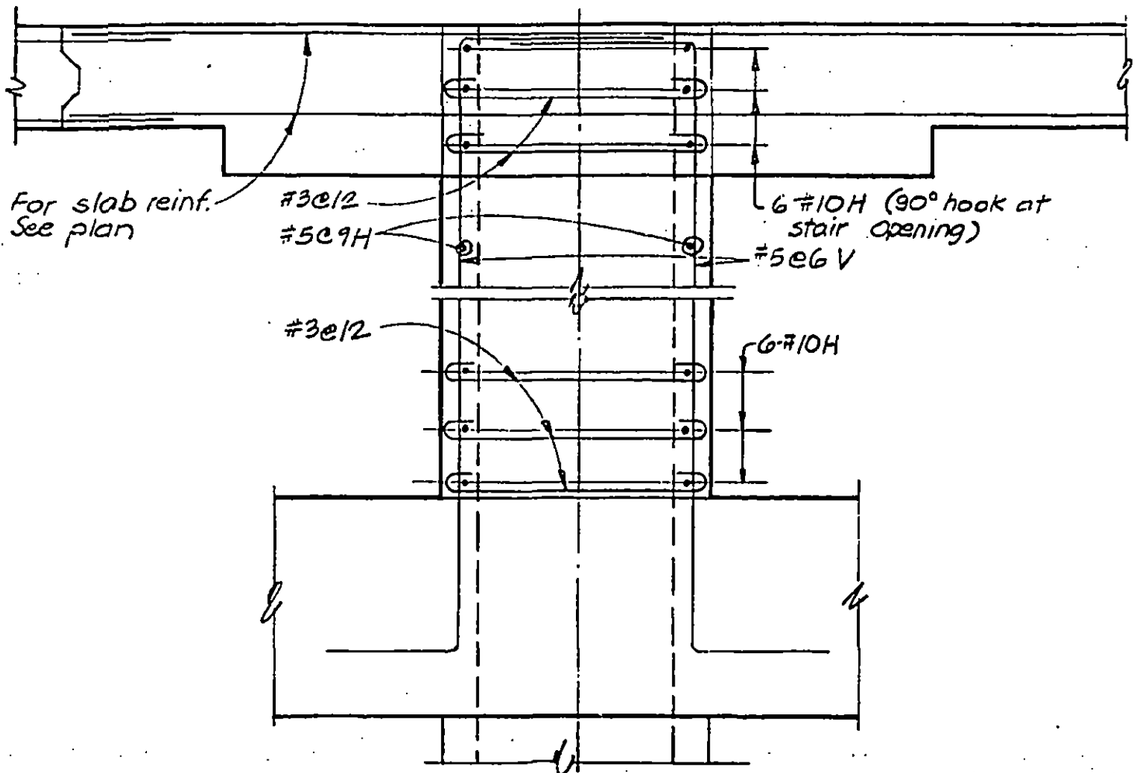

Section A-A

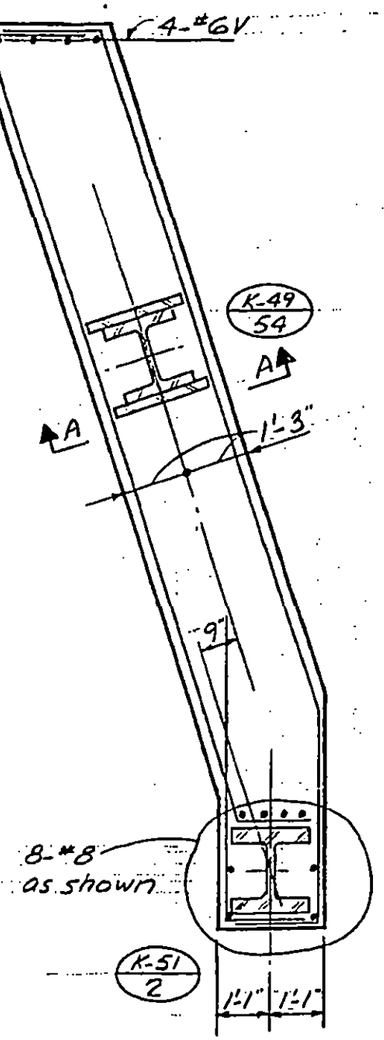

Detail A

LICENSED PROFESSIONAL ENGINEER
LESLIE E. ROBERTSON
No. 34360
UNIVERSITY OF THE STATE OF NEW YORK

DESIGNED K. Chiang

DRAWN A. Franqui

REVIEWED W. Clp

8-JK8-62.1

SKILLING, HELLE, CHRISTIANSEN, ROBERTSON — Structural & Civil Engineers

PROJECT: THE WORLD TRADE CENTER | TITLE: SECTIONS - PARKING ELEVATOR - ZONE K3 - EL. 284' | DATE: 1-15-72

REVISIONS

3-10-72 Complete Rev.

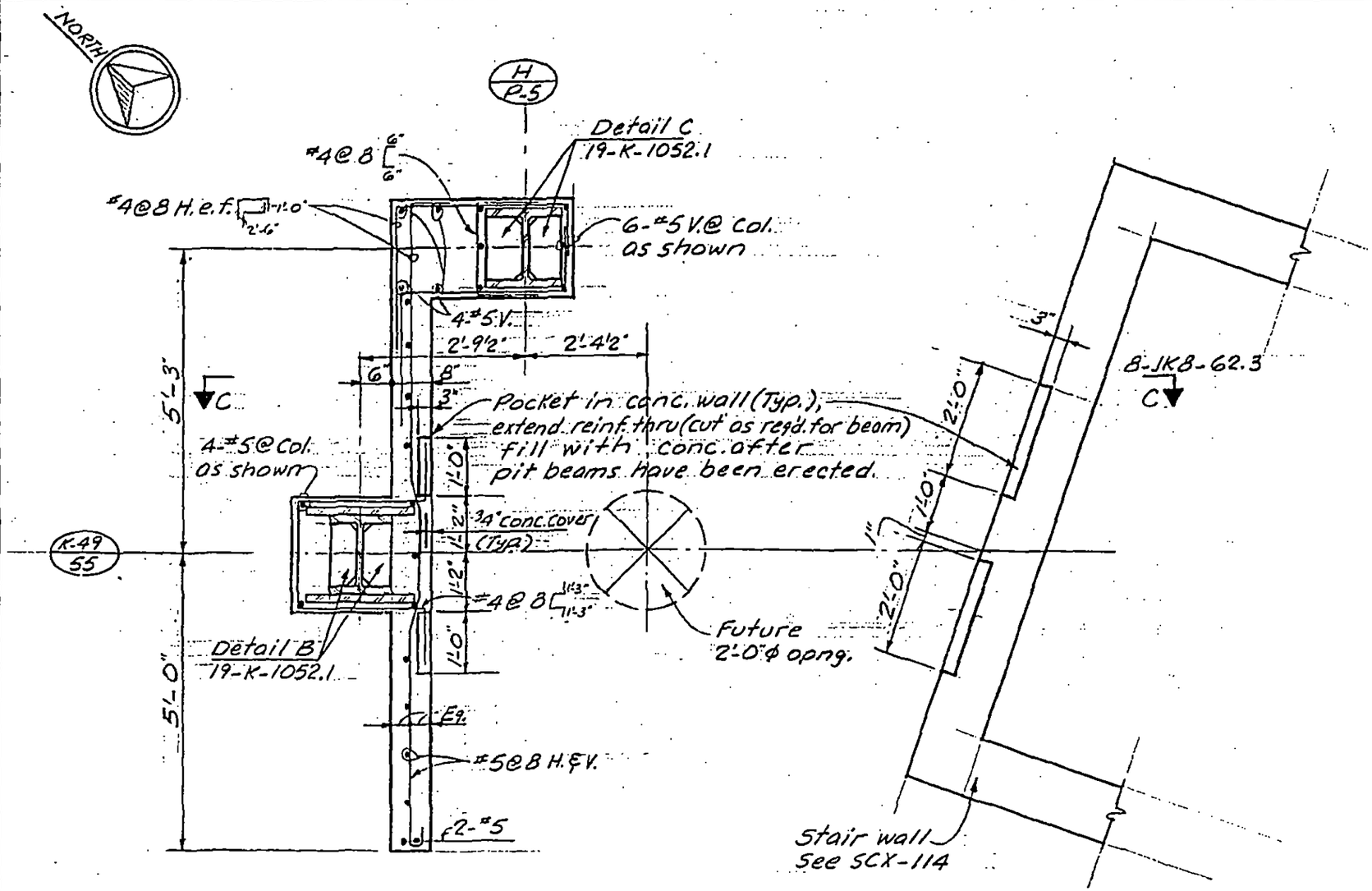

Detail B

LICENSED PROFESSIONAL ENGINEER — LESLIE E. ROBERTSON — No. 34360 — UNIVERSITY OF THE STATE OF NEW YORK

DESIGNED K. Chiang

DRAWN A. Franqui

REVIEWED LEAB

8-JK8-62.2

SKILLING, HELLE, CHRISTIANSEN, ROBERTSON — Structural & Civil Engineers

PROJECT: THE WORLD TRADE CENTER | TITLE: SECTIONS-PARKING ELEVATOR-ZONE K3-EL.294 | DATE: 1-15-72

REVISIONS

3-10-72 Complete Rev.

3-15-73

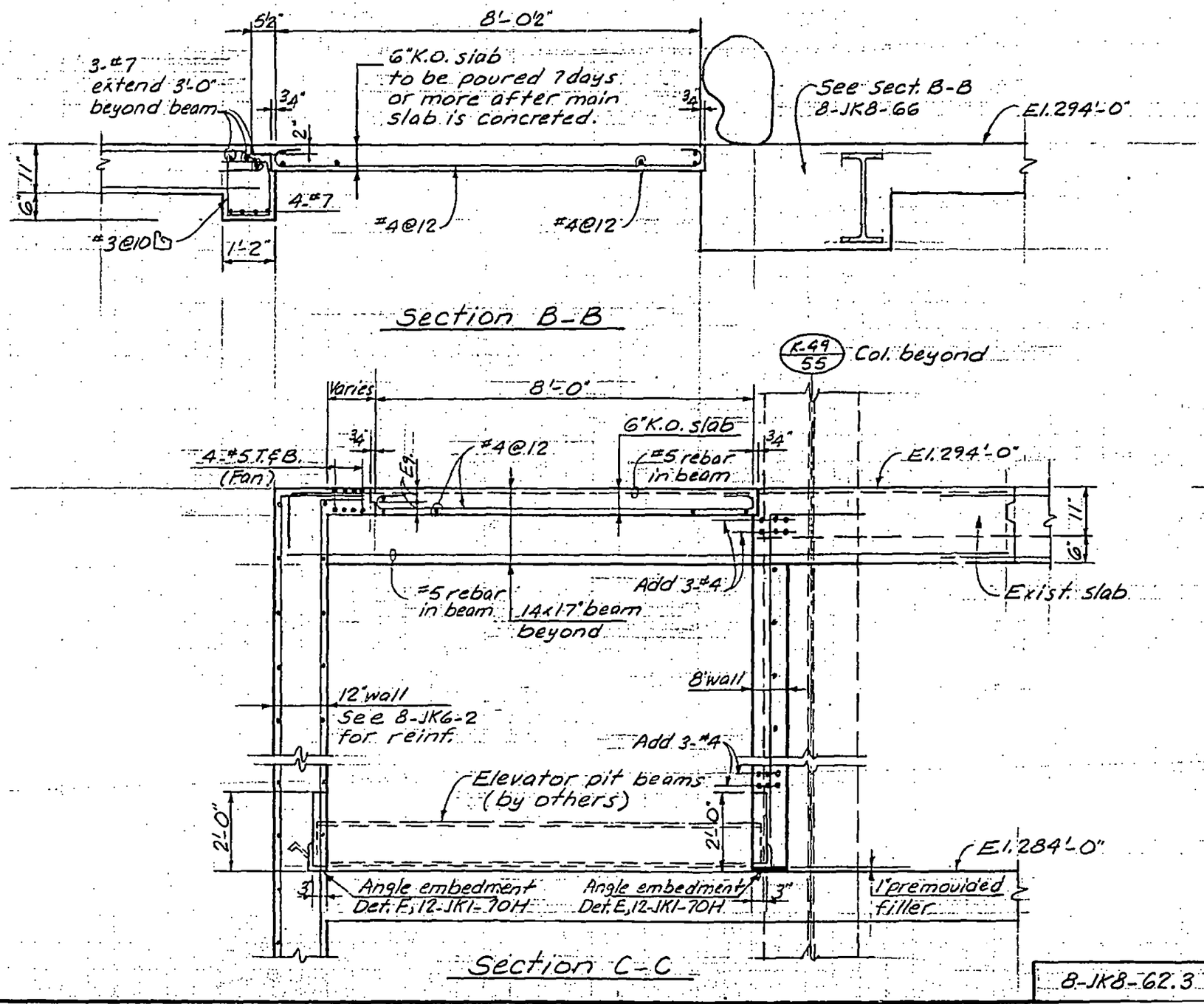

LICENSED PROFESSIONAL ENGINEER — LESLIE E. ROBERTSON — No. 34360 — UNIVERSITY OF THE STATE OF NEW YORK

DESIGNED K. Chiang

DRAWN A. Franqui

REVIEWED WAB

8-JK8-62.3

SKILLING, HELLE, CHRISTIANSEN, ROBERTSON — Structural & Civil Engineers

PROJECT	TITLE	DATE
THE WORLD TRADE CENTER	SECTIONS - PARKING ELEVATOR - ZONE K-3 - EL. 294	3-10-72

REVISIONS

3-15-73

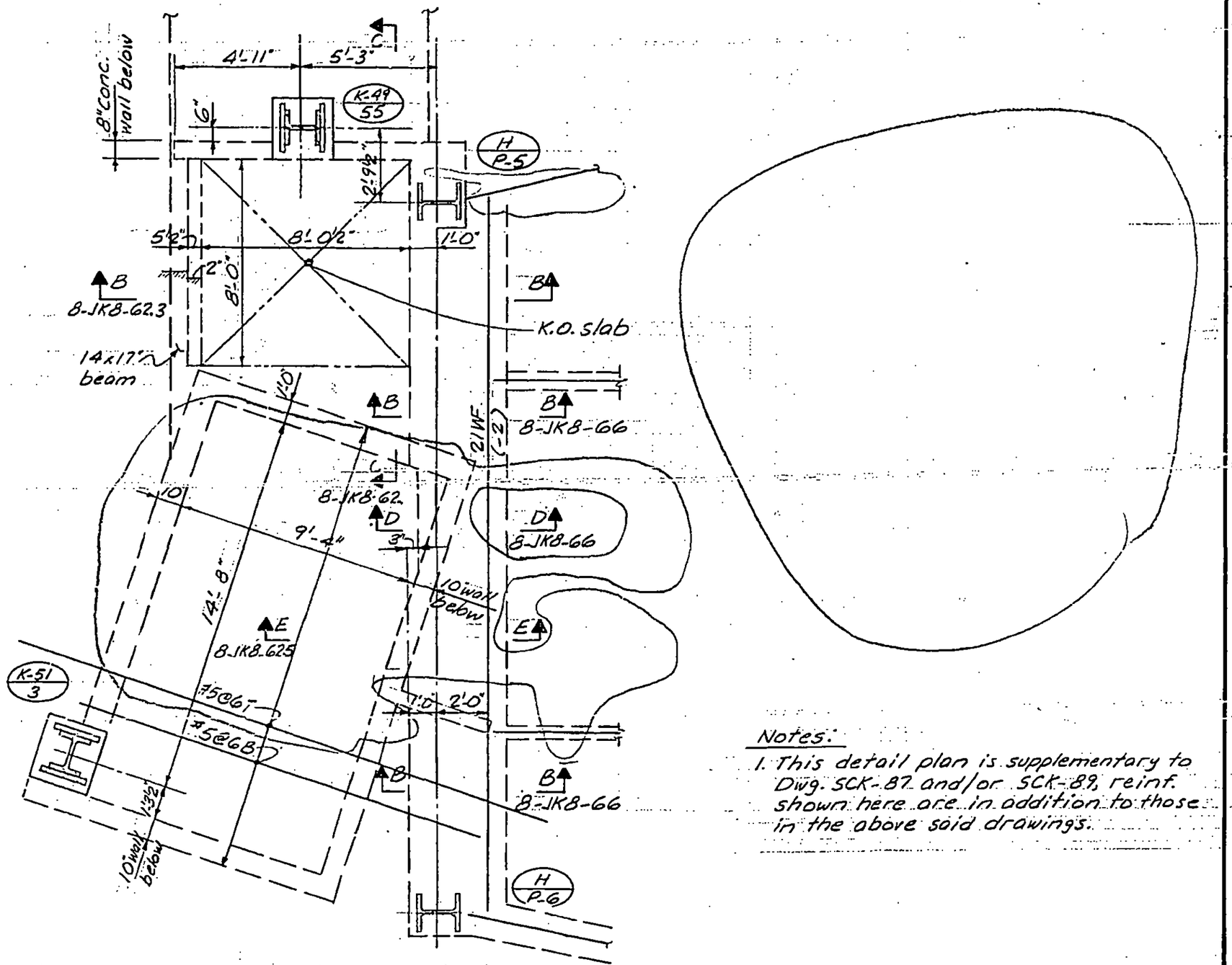

Detail C (Plan)

Notes:

1. This detail plan is supplementary to Dwg. SCK-87 and/or SCK-89, reinf. shown here are in addition to those in the above said drawings.

LICENSED PROFESSIONAL ENGINEER — LESLIE E. ROBERTSON — No 34360 — UNIVERSITY OF THE STATE OF NEW YORK

DESIGNED K. chiang.

DRAWN A. Franqui

REVIEWED Wap

8-JK8-62.4

SKILLING, HELLE, CHRISTIANSEN, ROBERTSON — Structural & Civil Engineers

PROJECT: THE WORLD TRADE CENTER | TITLE: SECTIONS - PARKING ELEVATOR - ZONE K-3 - EL. 294 | DATE: 3-10-72

REVISIONS

3-15-73

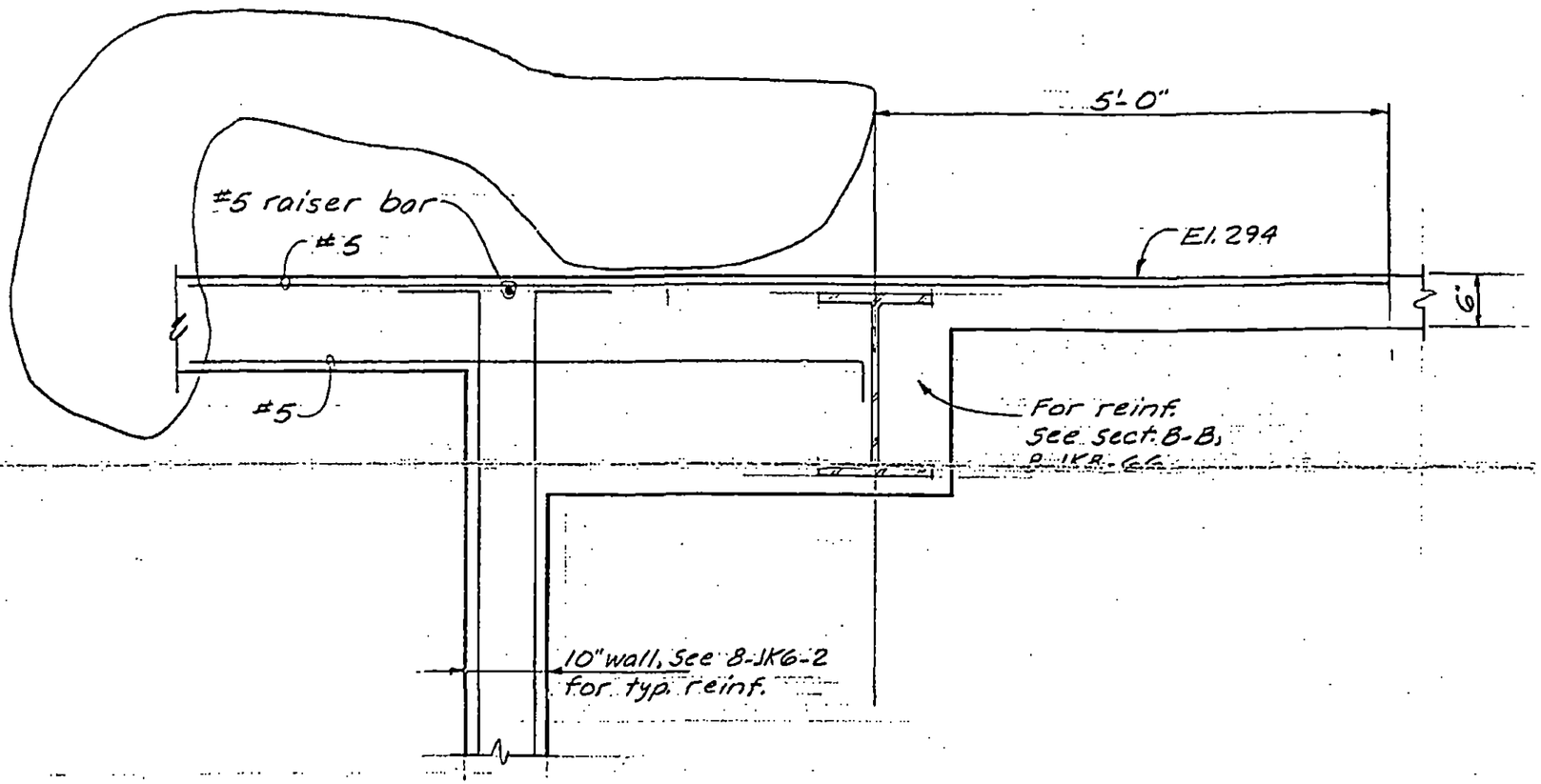

Section E-E

LICENSED PROFESSIONAL ENGINEER
LESLIE E. ROBERTSON
No 34360
UNIVERSITY OF THE STATE OF NEW YORK

DESIGNED K. Chiong

DRAWN A. Franqui

REVIEWED

8-JK8-62.5

SKILLING, HELLE, CHRISTIANSEN, ROBERTSON — Structural & Civil Engineers

PROJECT: THE WORLD TRADE CENTER | TITLE: SECTION AT STAIR K-3, EL. 294, ZONE K-3 | DATE: 3-9-73

REVISIONS

4/18/73

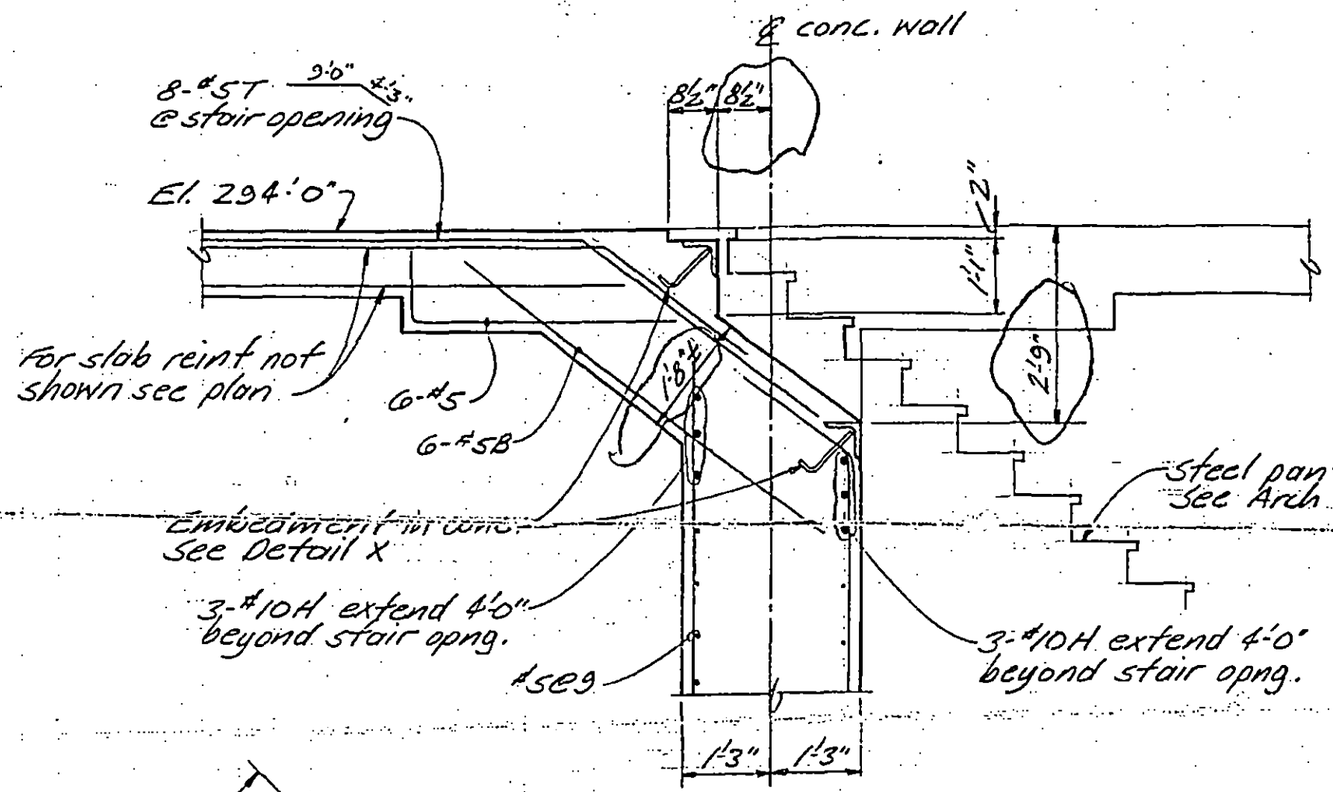

Section G-G

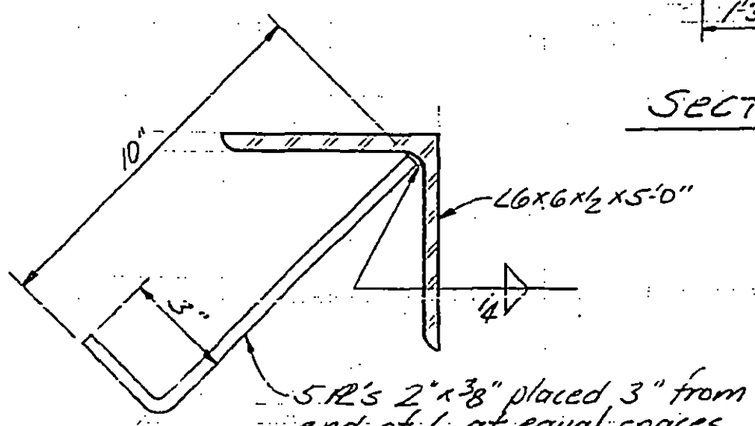

Detail X

DESIGNED KC

DRAWN JA ALF

REVIEWED

LICENSED PROFESSIONAL ENGINEER LESLIE E. ROBERTSON No. 34360 UNIVERSITY OF THE STATE OF NEW YORK

8-JK8-62.6

SKILLING, HELLE, CHRISTIANSEN, ROBERTSON — Structural & Civil Engineers

PROJECT THE WORLD TRADE CENTER | TITLE TYPICAL PLACEMENT OF WALL & F.K.O. SLAB REINF. | DATE 12-17-71

REVISIONS

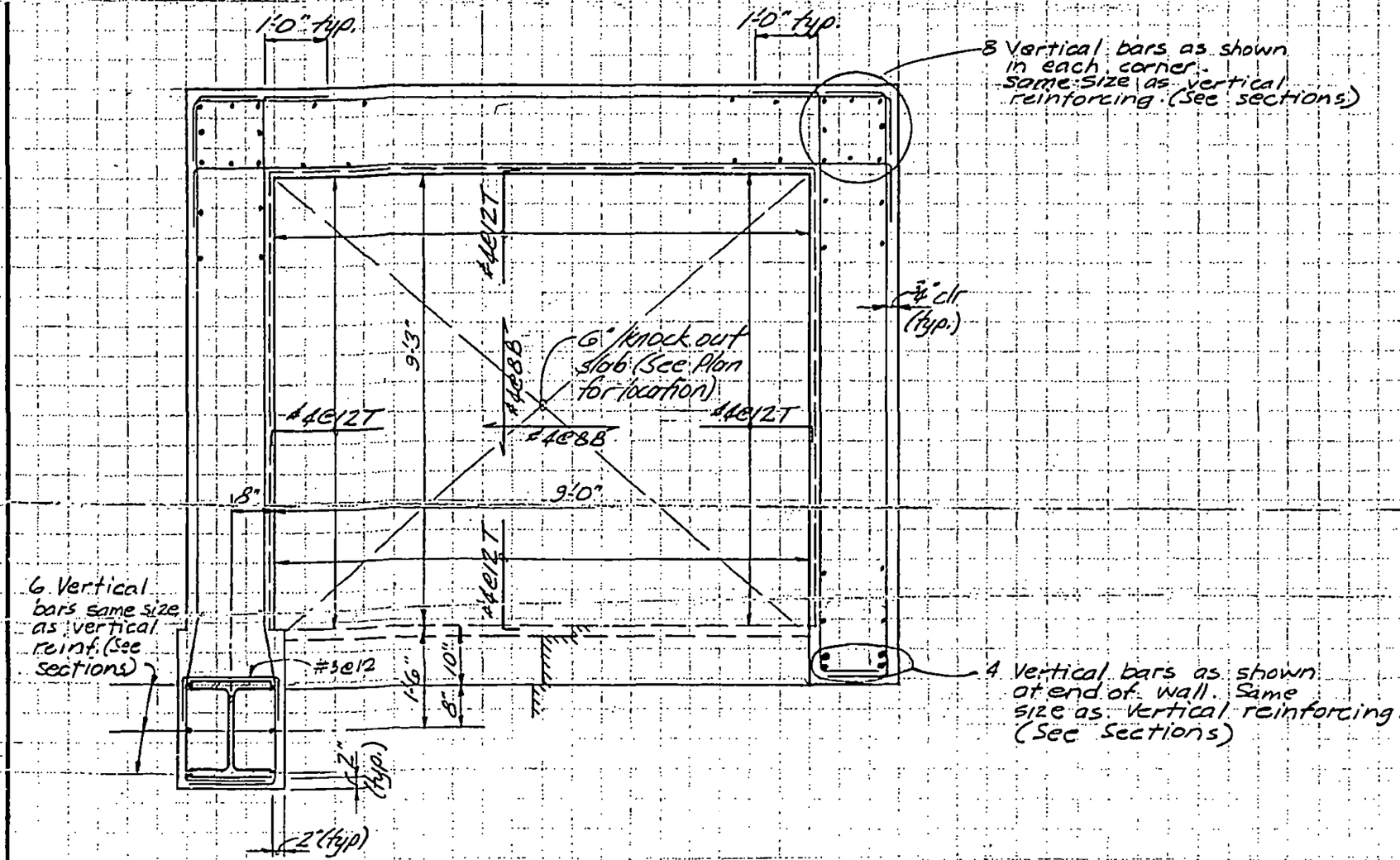

Detail A

LICENSED PROFESSIONAL ENGINEER — LESLIE E. ROBERTSON — No. 34360 — UNIVERSITY OF THE STATE OF NEW YORK

DESIGNED

DRAWN

REVIEWED

8-JKB-63.1

SKILLING, HELLE, CHRISTIANSEN, ROBERTSON — Structural & Civil Engineers

PROJECT: THE WORLD TRADE CENTER | TITLE: SECTIONS AT HOTEL FREIGHT ELEVATOR WALLS | DATE: 12-17-71

REVISIONS
1-15-72

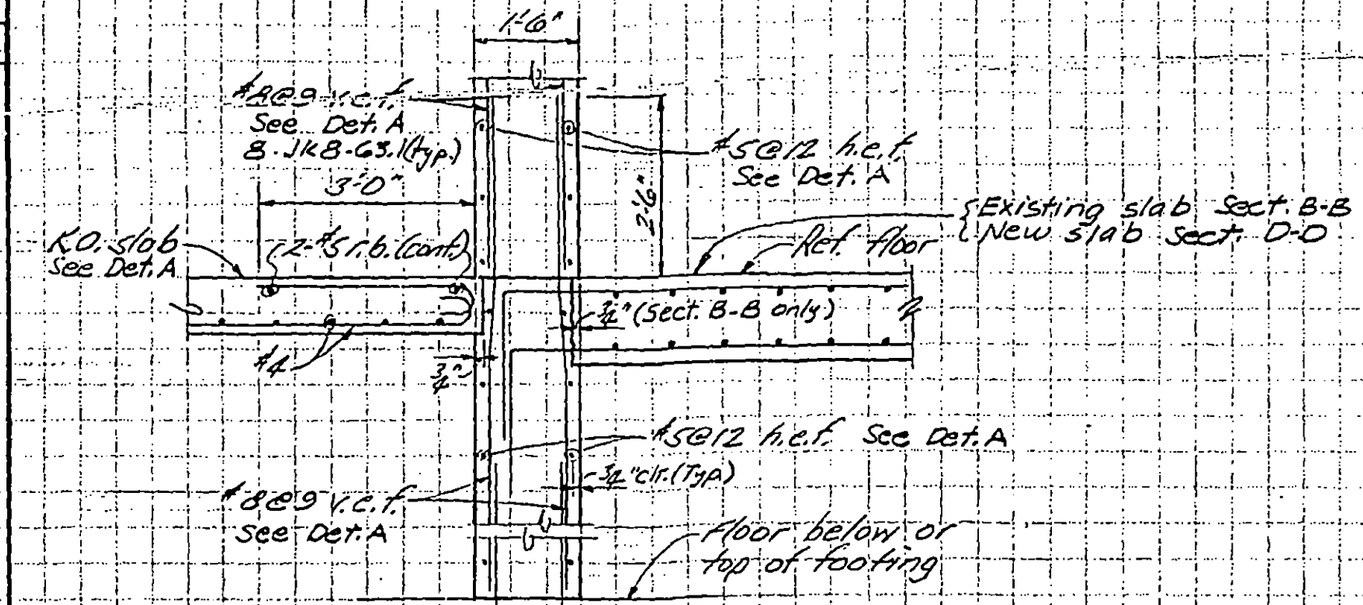

Section B-B
Section D-D

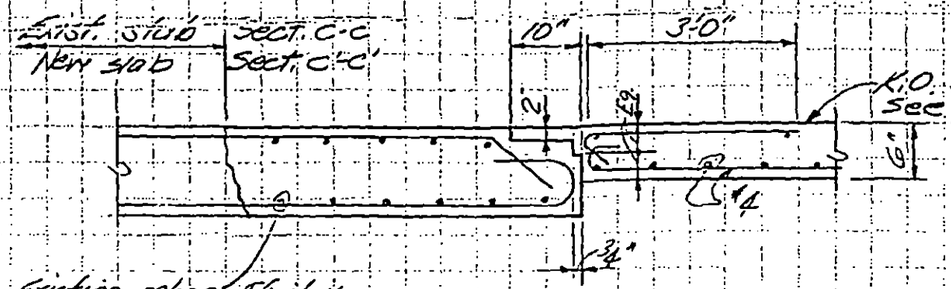

Existing rebar. If it is necessary to cut any bar in this area in order to construct the new wall, splice the bar with same size rebar of 3'-0" min. length. (Section C-C only)

Section C-C
Section C'-C' (sim.)

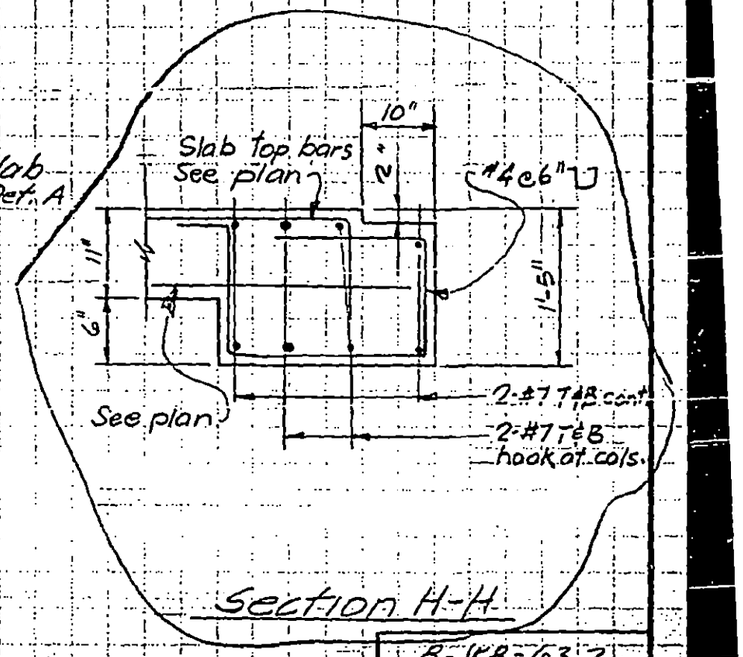

Section H-H

B-JKB-63.2

LICENSED PROFESSIONAL ENGINEER
LESLIE E. ROBERTSON
No. 34360
UNIVERSITY OF THE STATE OF NEW YORK

DESIGNED
DRAWN
REVIEWED

SKILLING, HELLE, CHRISTIANSEN, ROBERTSON — Structural & Civil Engineers

PROJECT: THE WORLD TRADE CENTER | TITLE: PLACEMENT OF WALL REINFORCEMENT AT EL 264'-0" | DATE: 12-17-71

REVISIONS

12-1-72

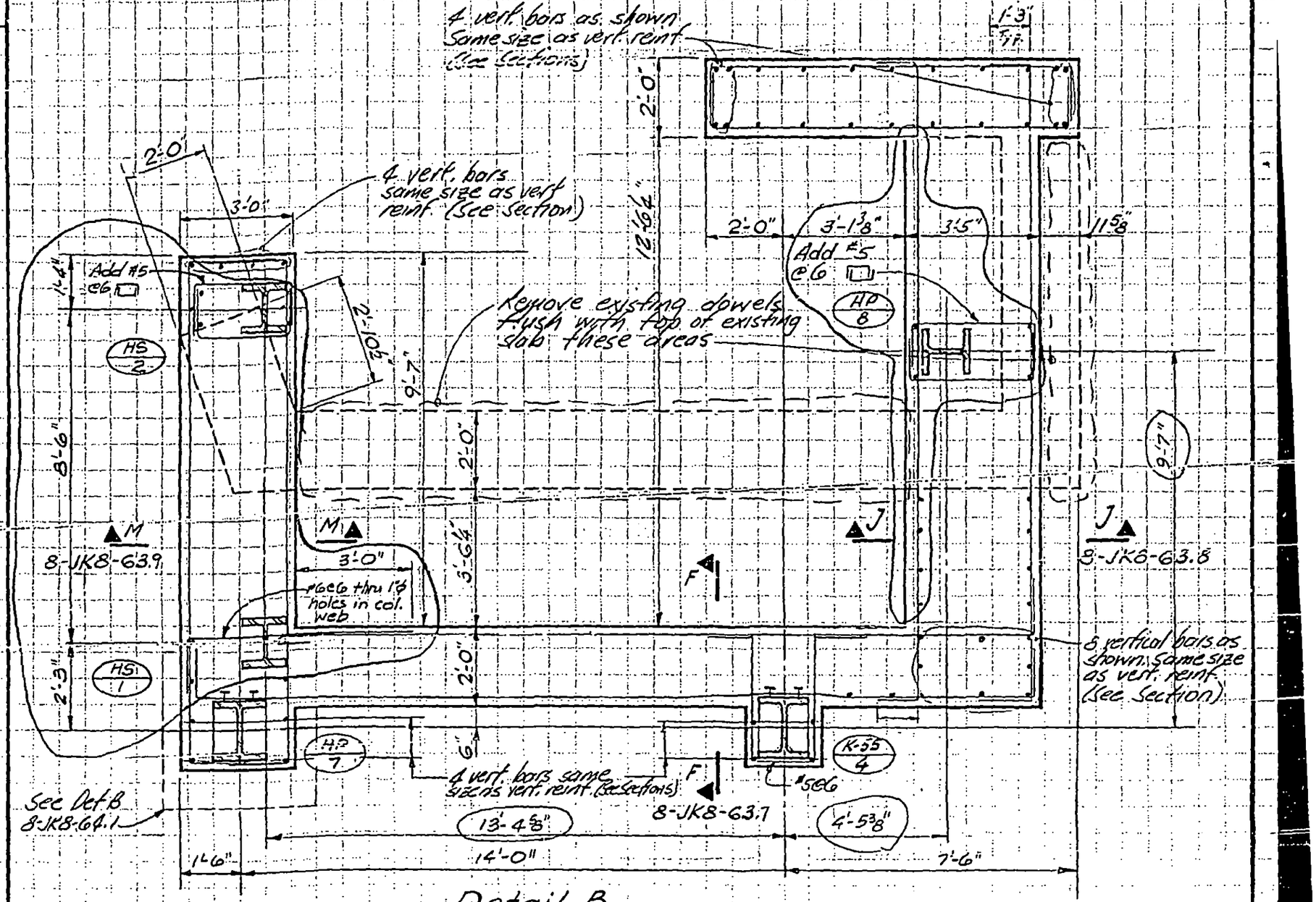

Detail B
(Plan)

LICENSED PROFESSIONAL ENGINEER
LESLIE E. ROBERTSON
No. 34560
UNIVERSITY OF THE STATE OF NEW YORK

DESIGNED: KC
DRAWN: J Gricius
REVIEWED:

8-JK8-C 2 2

SKILLING, HELLE, CHRISTIANSEN, ROBERTSON — Structural & Civil Engineers

PROJECT: THE WORLD TRADE CENTER | TITLE: PLACEMENT OF WALL REINF. AT EL. 274 | DATE: 12-17-71

REVISIONS

12-1-72

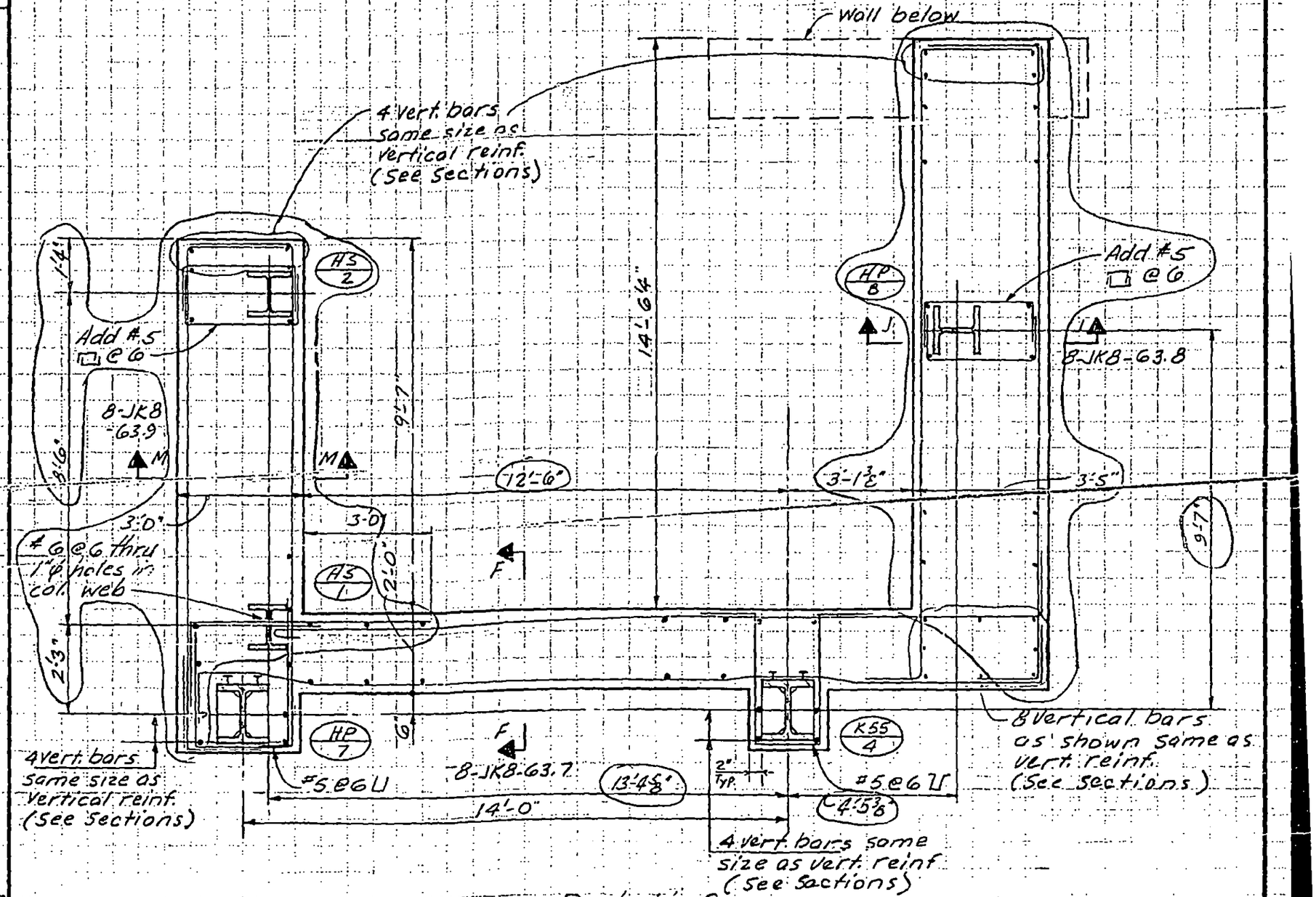

Detail C
(Plan)

LICENSED PROFESSIONAL ENGINEER
LESLIE E. ROBERTSON
No. 34360
UNIVERSITY OF THE STATE OF NEW YORK

DESIGNED K. CHIANG

DRAWN A. FRANQUI

REVIEWED

8-JK8-63.4

SKILLING, HELLE, CHRISTIANSEN, ROBERTSON — Structural & Civil Engineers

PROJECT: THE WORLD TRADE CENTER | TITLE: PLACEMENT OF WALL REINF. AT EL. 284 | DATE: 1-15-72

REVISIONS

12-1-72

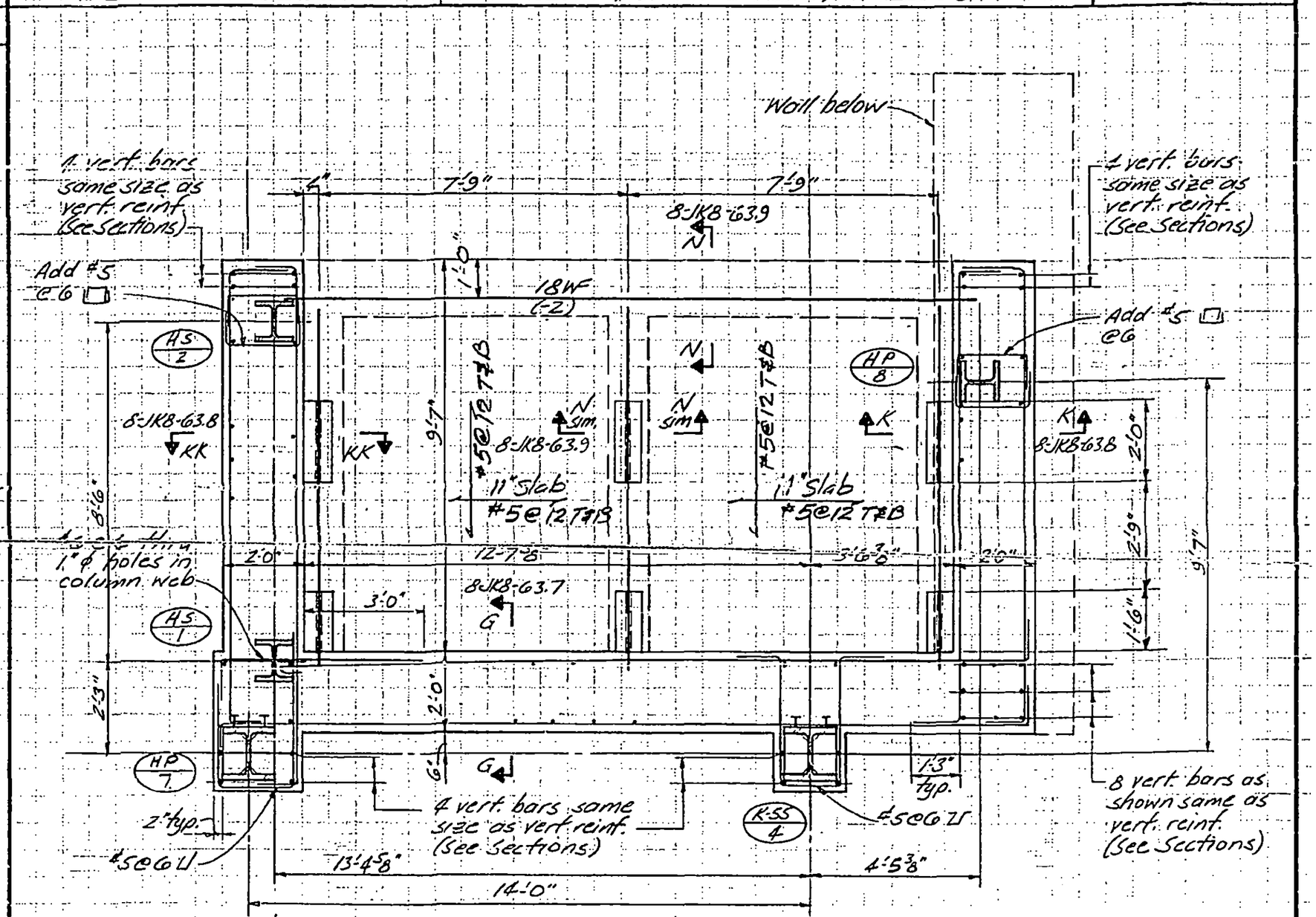

Detail D

8-JKB-63.5

LICENSED PROFESSIONAL ENGINEER — LESLIE E. ROBERTSON — NO. 34366 — UNIVERSITY OF THE STATE OF NEW YORK

DESIGNED

DRAWN J. Williams

REVIEWED (P.) Brewer

SKILLING, HELLE, CHRISTIANSEN, ROBERTSON — Structural & Civil Engineers

PROJECT: THE WORLD TRADE CENTER | TITLE: SECTIONS AT HOTEL FREIGHT ELEVATOR WALLS | DATE: 12-17-71

REVISIONS
1-15-72
12-1-72

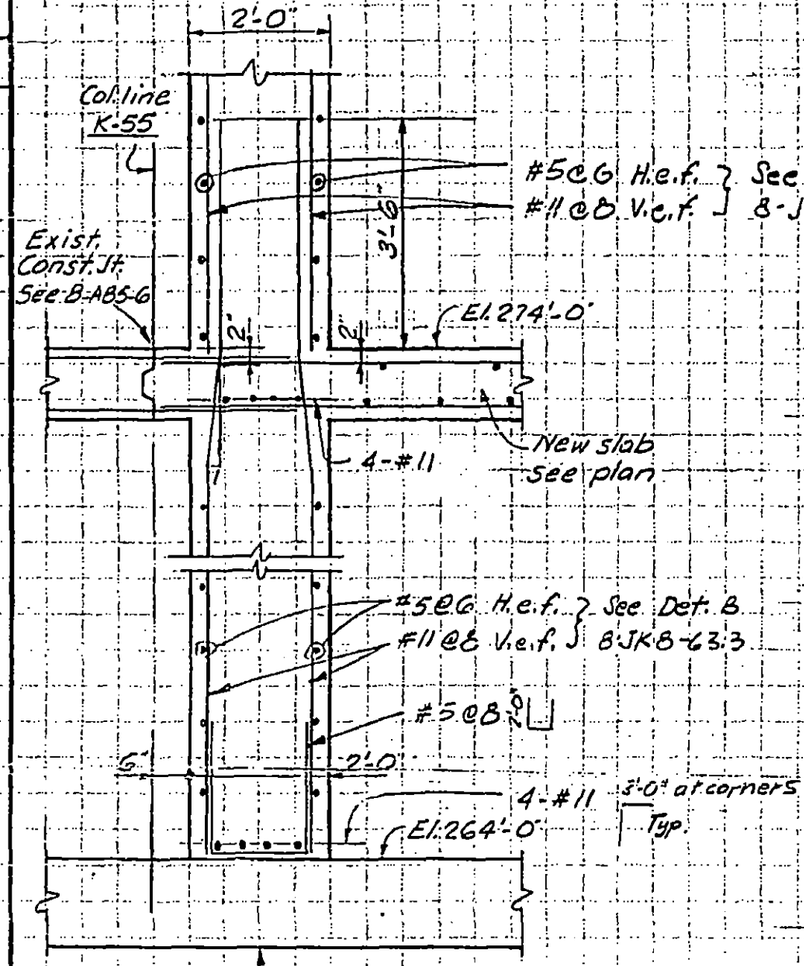

Section F-F

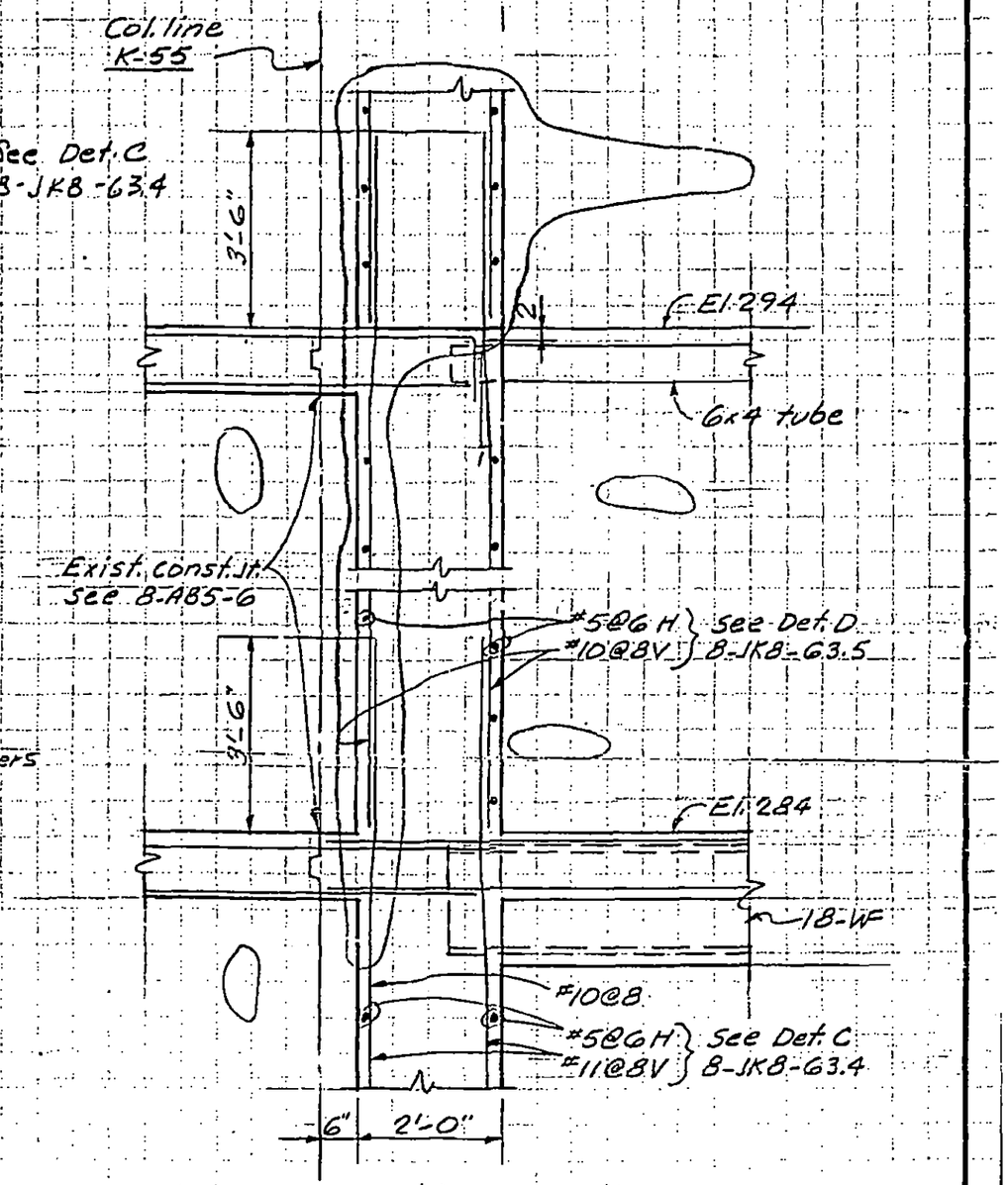

Section G-G

LICENSED PROFESSIONAL ENGINEER — LESLIE E. ROBERTSON — No. 34360 — UNIVERSITY OF THE STATE OF NEW YORK

DESIGNED: K. CHIANG
DRAWN: A. FRANQUI
REVIEWED: W. Brewer

8-JK8-63.7

SKILLING, HELLE, CHRISTIANSEN, ROBERTSON — Structural & Civil Engineers

PROJECT: THE WORLD TRADE CENTER | TITLE: SECTIONS AT HOTEL FREIGHT ELEVATOR WALLS | DATE: 12-17-71

REVISIONS
1-15-72
12-1-72

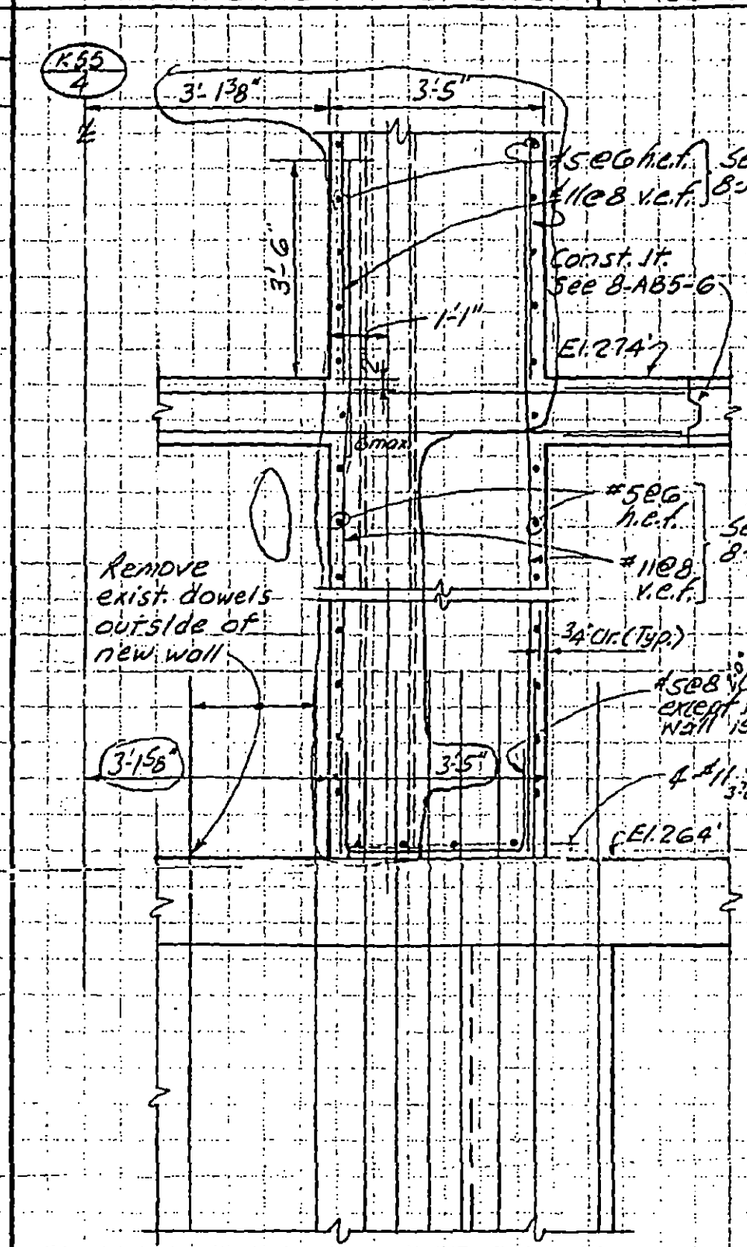

Section J-J

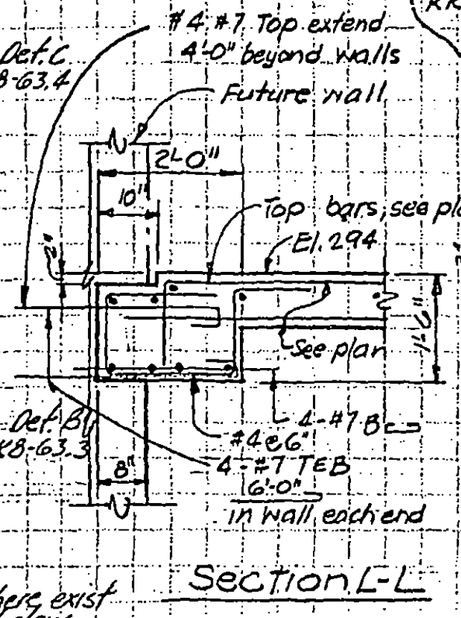

Section L-L

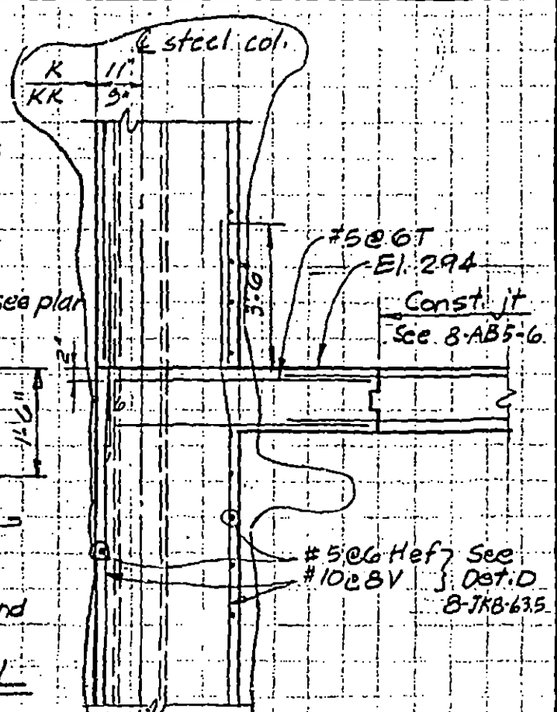

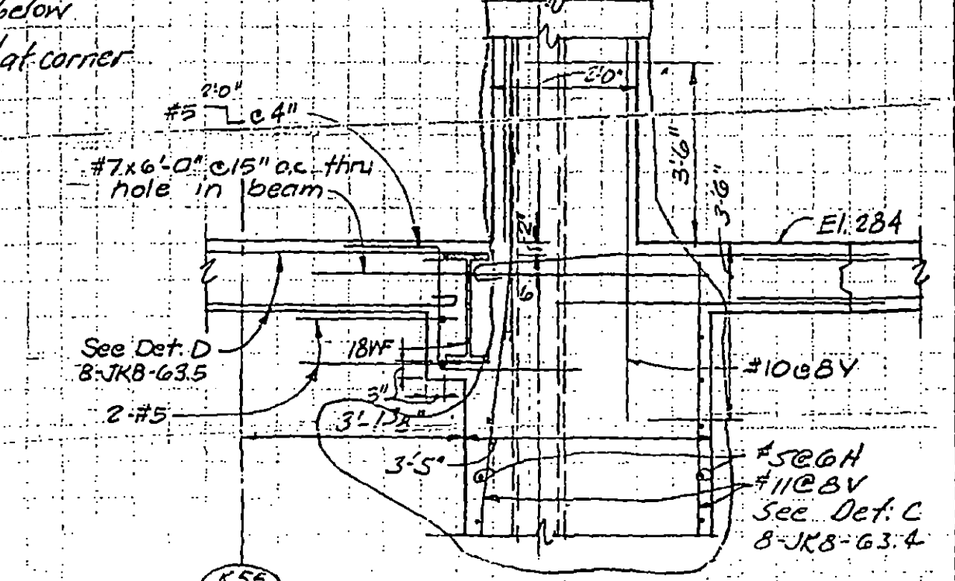

Section K-K

Section KK-KK as noted

8-JKB-63.0

LICENSED PROFESSIONAL ENGINEER — LESLIE E. ROBERTSON — No. 34360 — UNIVERSITY OF THE STATE OF NEW YORK

DESIGNED K. CHIANG
DRAWN A. FRANQUI
REVIEWED W. Brewer

SKILLING, HELLE, CHRISTIANSEN, ROBERTSON — Structural & Civil Engineers

PROJECT: THE WORLD TRADE CENTER | TITLE: SECTIONS AT HOTEL FREIGHT ELEVATOR WALLS | DATE: 12-17-71

REVISIONS
1-15-72
12-1-72

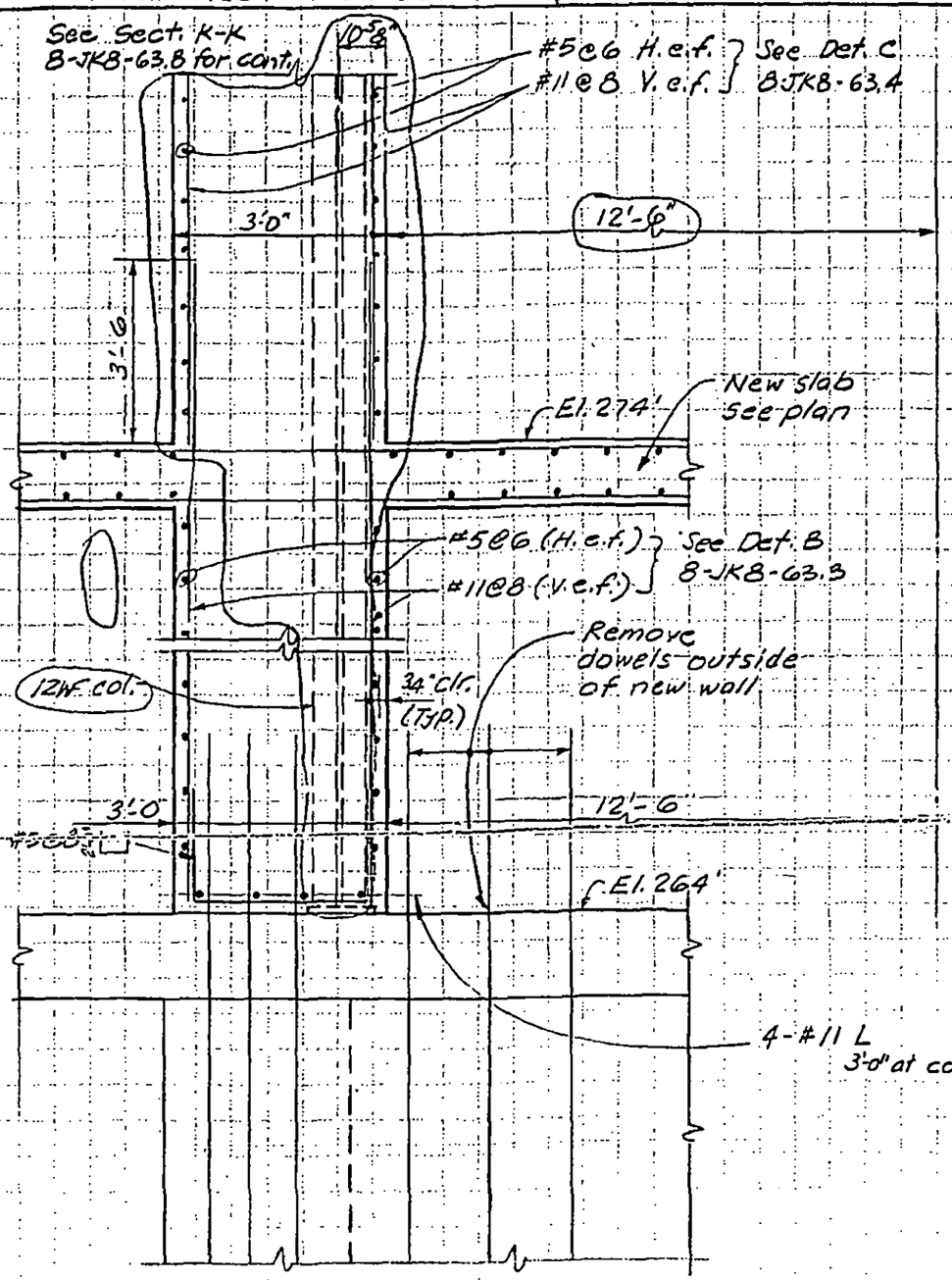

Section M-M

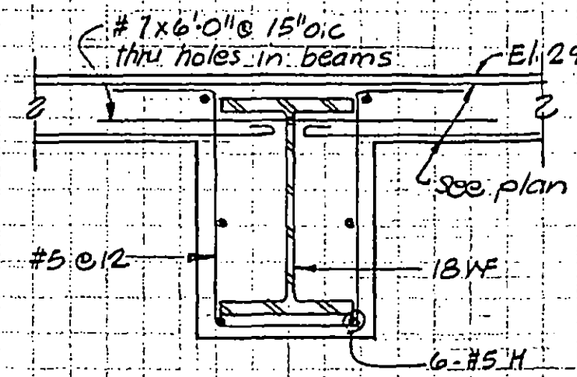

Section N-N

LICENSED PROFESSIONAL ENGINEER — LESLIE E. ROBERTSON — No 34360 — UNIVERSITY OF THE STATE OF NEW YORK

DESIGNED K. CHIANG
DRAWN A. ERAHQUI
REVIEWED J. J. Brewer

8-JK8-63.9

SKILLING, HELLE, CHRISTIANSEN, ROBERTSON — Structural & Civil Engineers

PROJECT: THE WORLD TRADE CENTER

TITLE: PLAN AT FREIGHT ELEVATOR - EL. 284

DATE: 1-15-72

REVISIONS

12-1-72

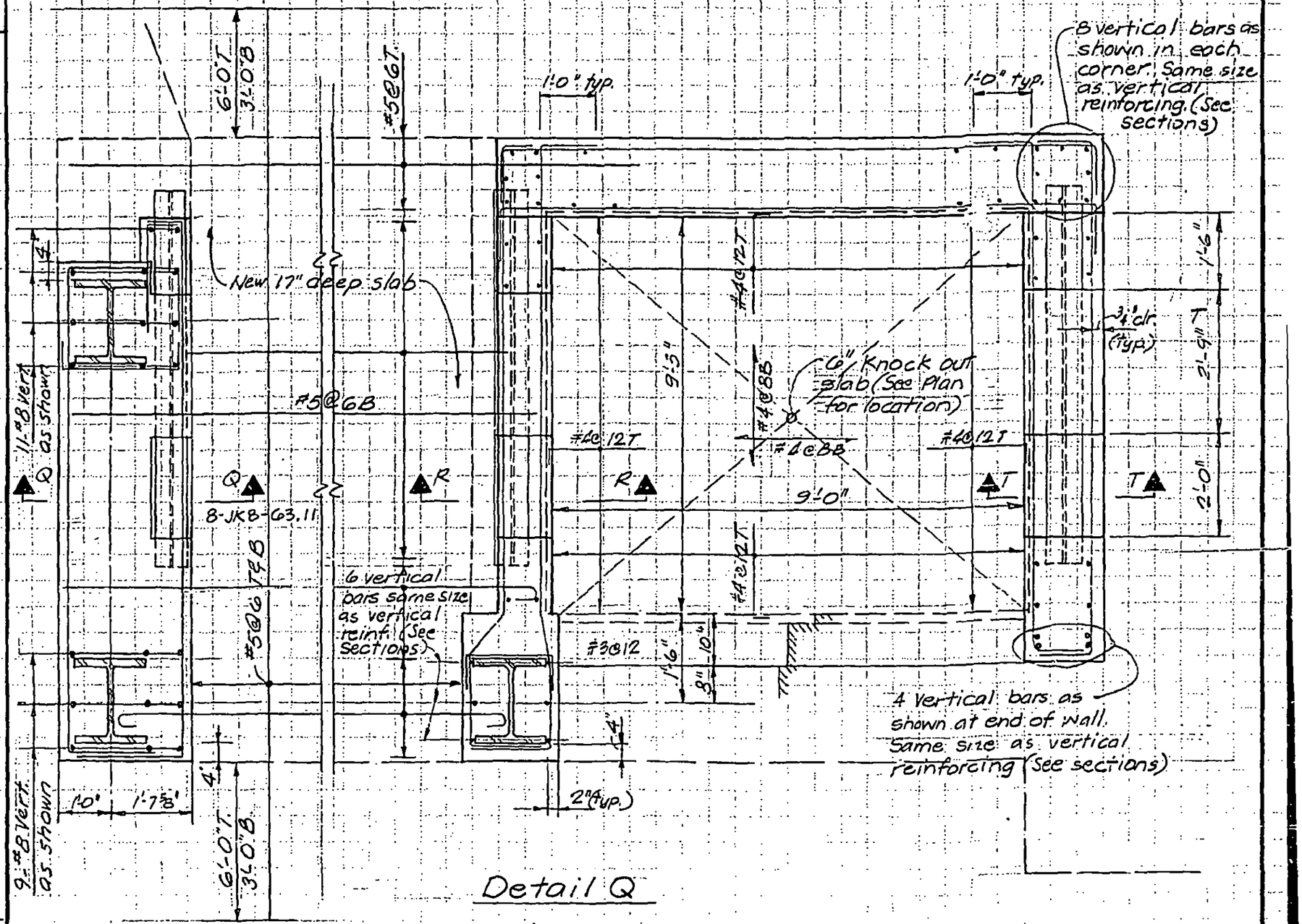

Detail Q

LICENSED PROFESSIONAL ENGINEER — LESLIE E. ROBERTSON — No. 34380 — UNIVERSITY OF THE STATE OF NEW YORK

DESIGNED

DRAWN P.M. Orchi

REVIEWED W Brewer

8-JK8-63.10

SKILLING, HELLE, CHRISTIANSEN, ROBERTSON — Structural & Civil Engineers

PROJECT: THE WORLD TRADE CENTER. | TITLE: SECTIONS AT ELEVATORS | DATE: 1-15-72

REVISIONS

12-1-72

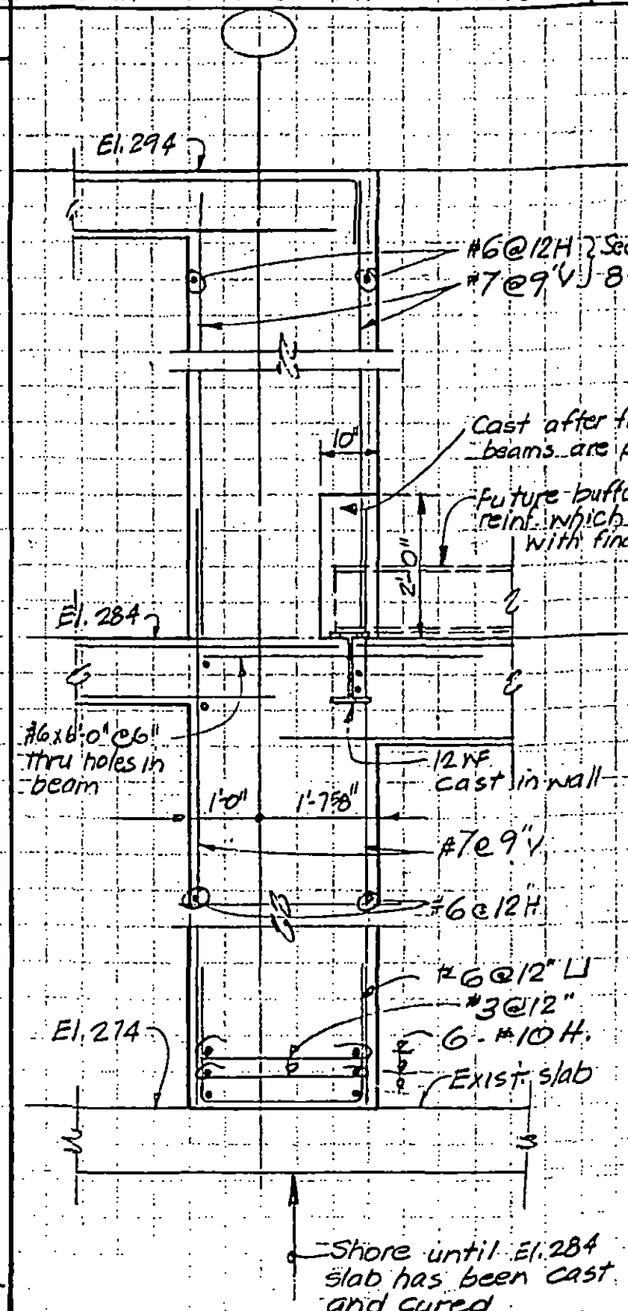

Section Q-Q

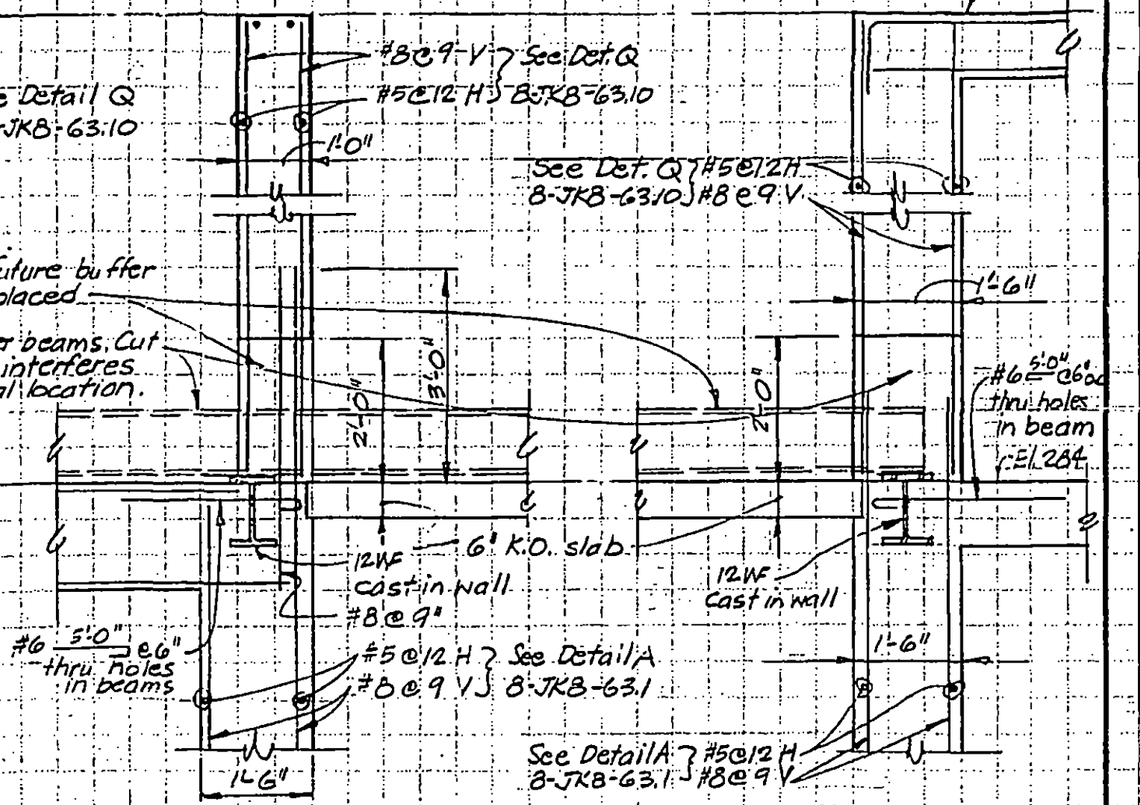

Section R-R

Section S-S

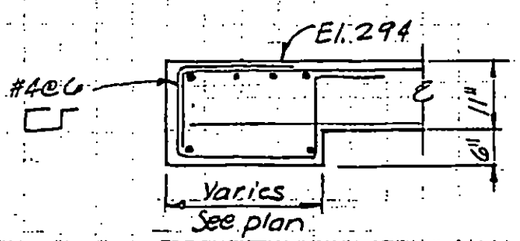

Section T-T

LICENSED PROFESSIONAL ENGINEER — LESLIE E. ROBERTSON — No. 34360 — UNIVERSITY OF THE STATE OF NEW YORK

DESIGNED

DRAWN P.M. O'Reilly

REVIEWED W. Brewer

8-JK8-63.11

SKILLING, HELLE, CHRISTIANSEN ROBERTSON — Structural & Civil Engineers

PROJECT THE WORLD TRADE CENTER | TITLE BOX-OUT CONCRETE | DATE 12-17-71

REVISIONS
12/28/71
1-15-72

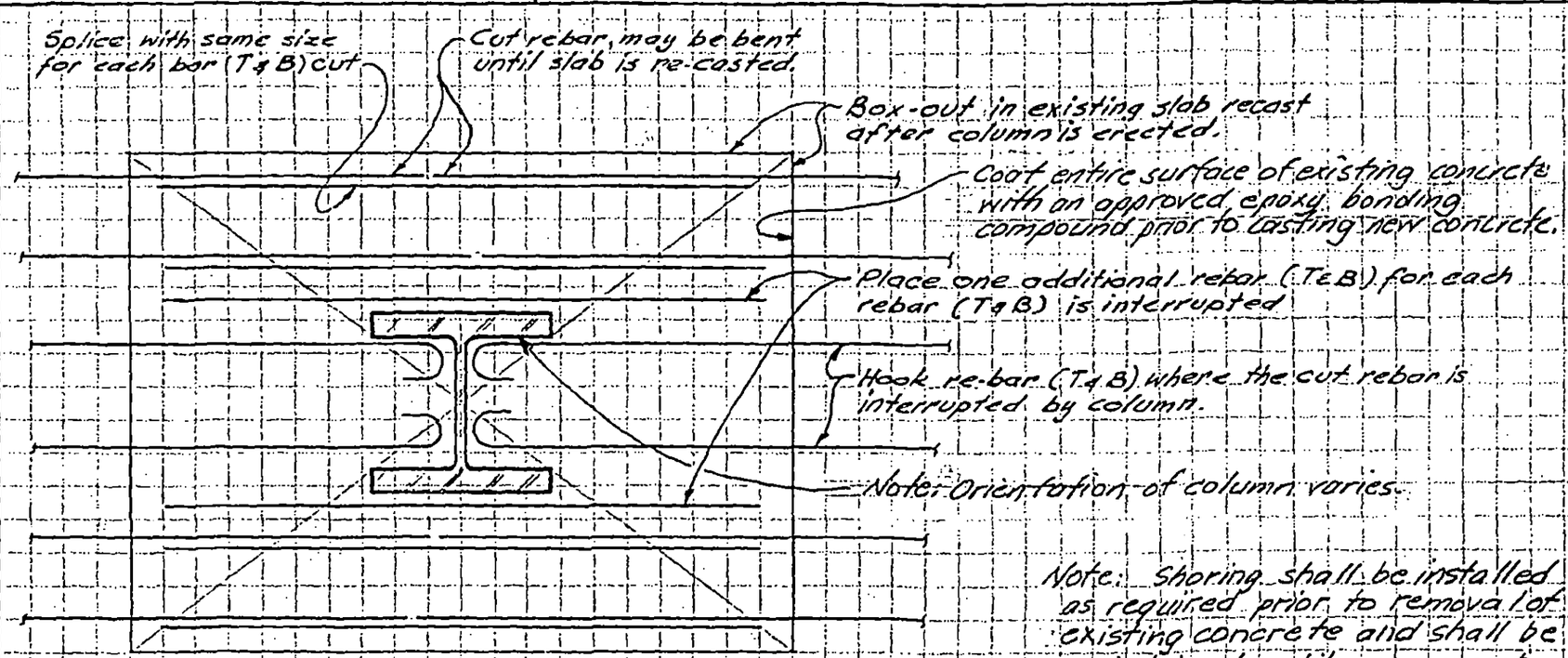

Detail A-E (same for both direction)

Note: Cut rebar to be bent up to provide 3'-0" x 3'-0" min. clear. Detail A
Cut rebar to be bent up to provide 6'-0" x 6'-0" min. clear. Detail E

Note: Shoring shall be installed as required prior to removal of existing concrete and shall be maintained until new concrete has reached design strength.

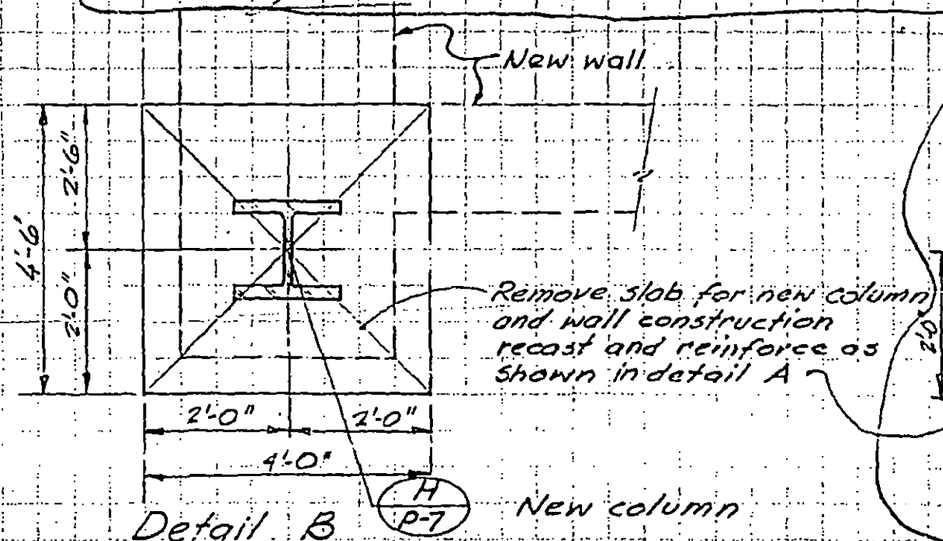

Detail B

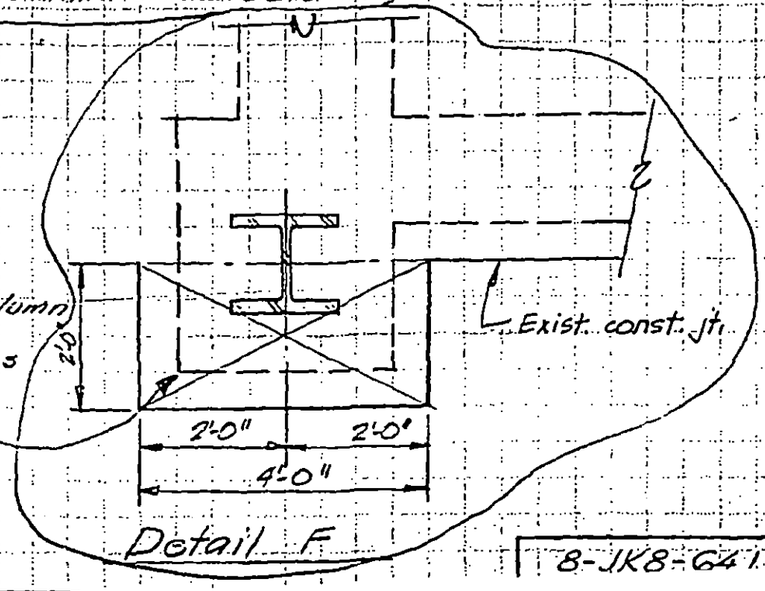

Detail F

LICENSED PROFESSIONAL ENGINEER
LESLIE E. ROBERTSON
No. 34360
UNIVERSITY OF THE STATE OF NEW YORK

DESIGNED KC
DRAWN J. Gricius
REVIEWED W. Brewer

8-JK8-641

SKILLING, HELLE, CHRISTIANSEN, ROBERTSON — Structural & Civil Engineers

PROJECT: THE WORLD TRADE CENTER | TITLE: BOX-OUT CONCRETE | DATE: 12-28-71

REVISIONS

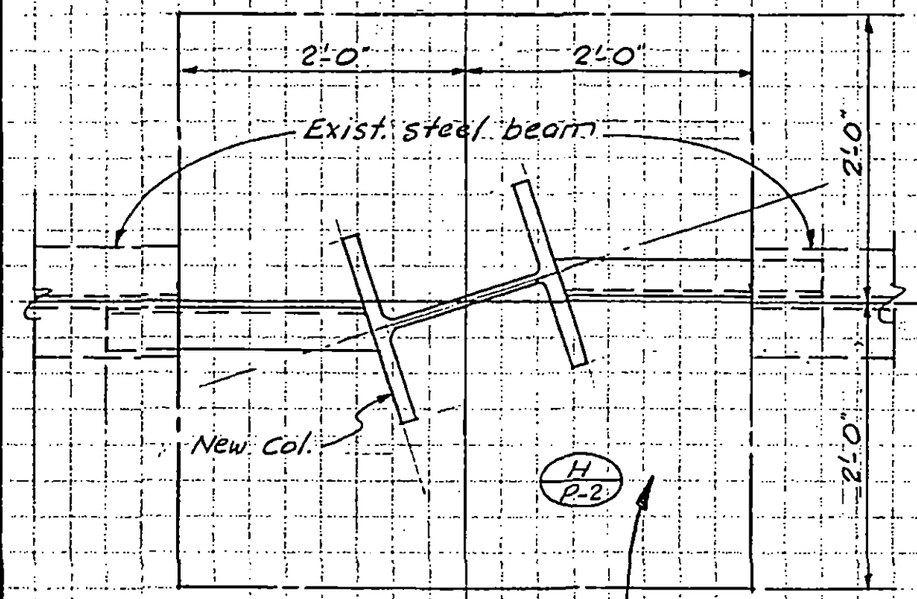

Detail C

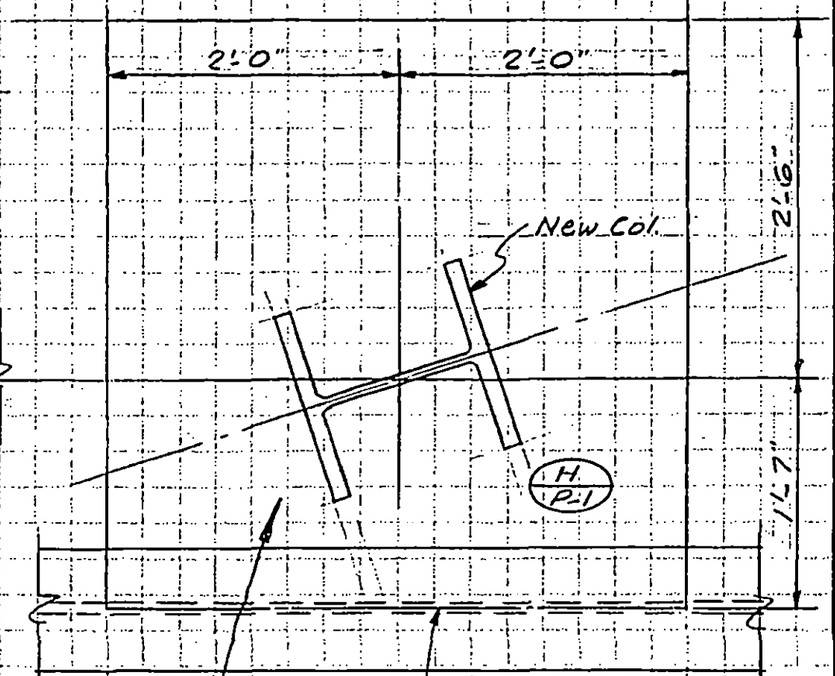

Detail D

Note:
See Detail A, 8-JK8-64.1 for all information not shown.

LICENSED PROFESSIONAL ENGINEER
LESLIE E. ROBERTSON
No. 34360
UNIVERSITY OF THE STATE OF NEW YORK

DESIGNED

DRAWN

REVIEWED

8-JK8-64.2

SKILLING, HELLE, CHRISTIANSEN, ROBERTSON — Structural & Civil Engineers

PROJECT: THE WORLD TRADE CENTER | TITLE: DETAILS AT EL. 264 - ZONE K-1 | DATE: 11-26-71

REVISIONS

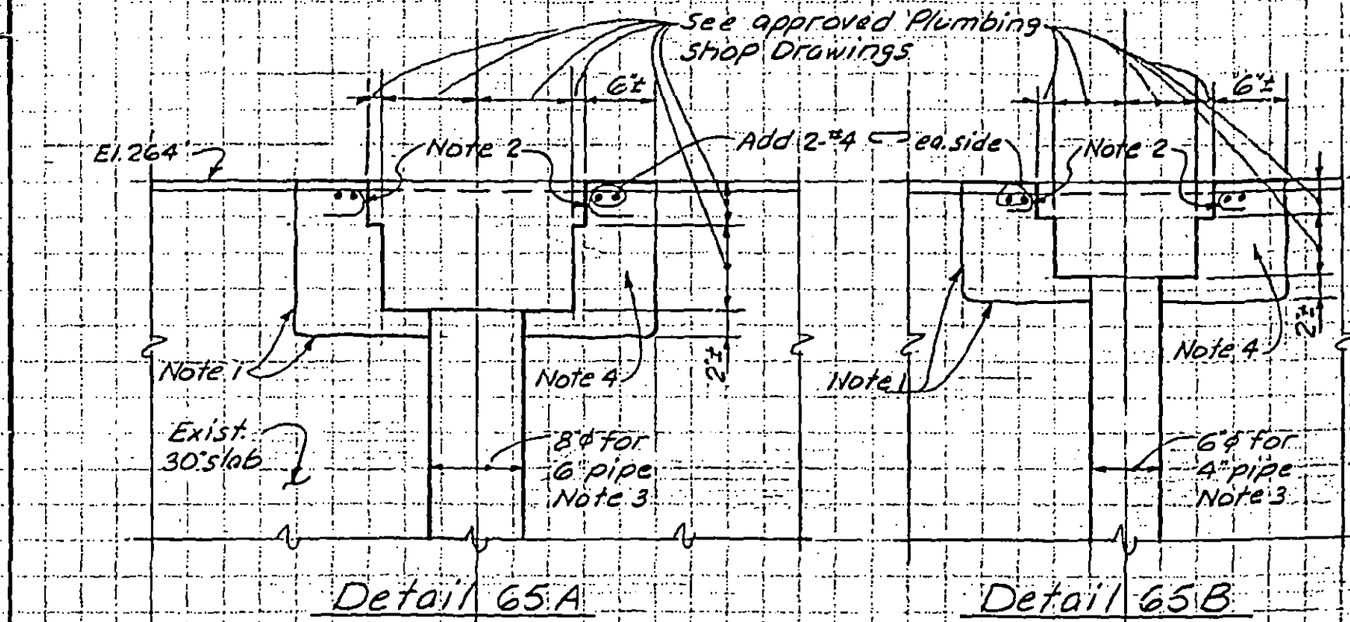

Detail 65A

Detail 65B

Note 1. Remove exist. concrete without damaging existing reinforcing.

Note 2. Cut exist. reinf. interrupted by drain and hook.

Note 3. Core drill round hole for pipe.

Note 4. Set drain and recast concrete around using approved "non-shrink" concrete with approved bonding compound.

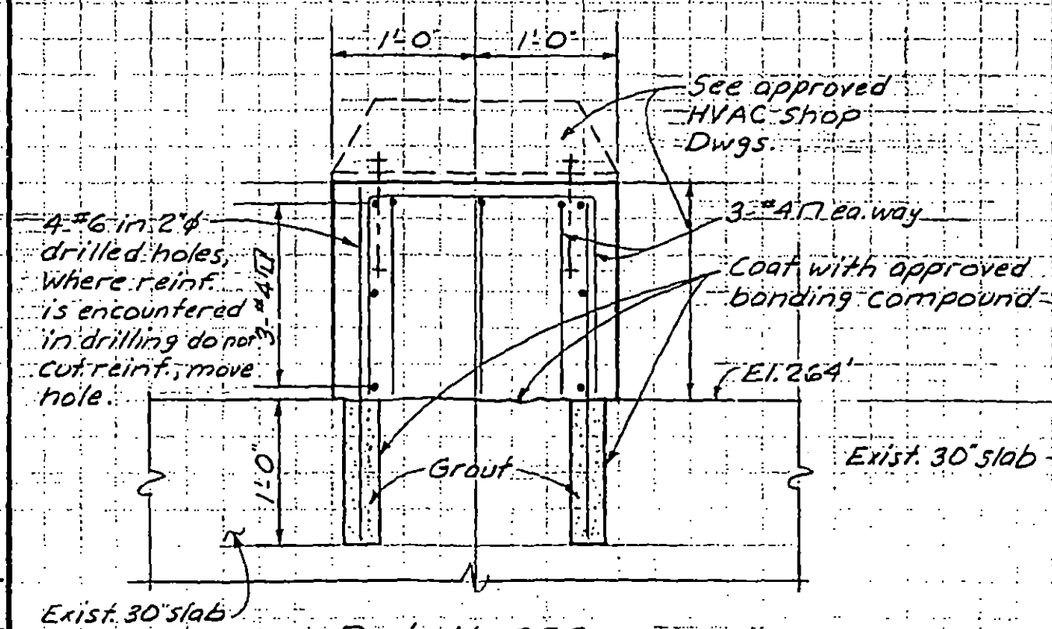

Detail 65C

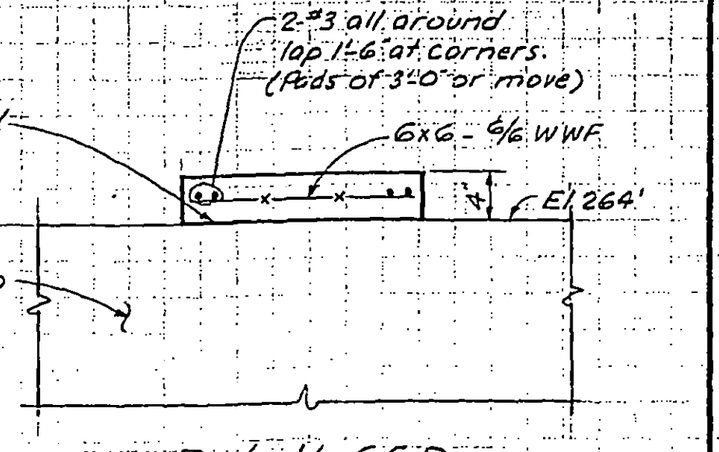

Detail 65D

LICENSED PROFESSIONAL ENGINEER
LESLIE E. ROBERTSON
No. 34360
UNIVERSITY OF THE STATE OF NEW YORK

DESIGNED W. BREWER

DRAWN A. FRANQUI

REVIEWED

8-JK8-65.1

SKILLING, HELLE, CHRISTIANSEN, ROBERTSON — Structural & Civil Engineers

PROJECT: THE WORLD TRADE CENTER | TITLE: SECTION AT PASSENGER ELEVATOR AT EL. 294 | DATE: 1-15-72

REVISIONS
3-10-72
3-15-73

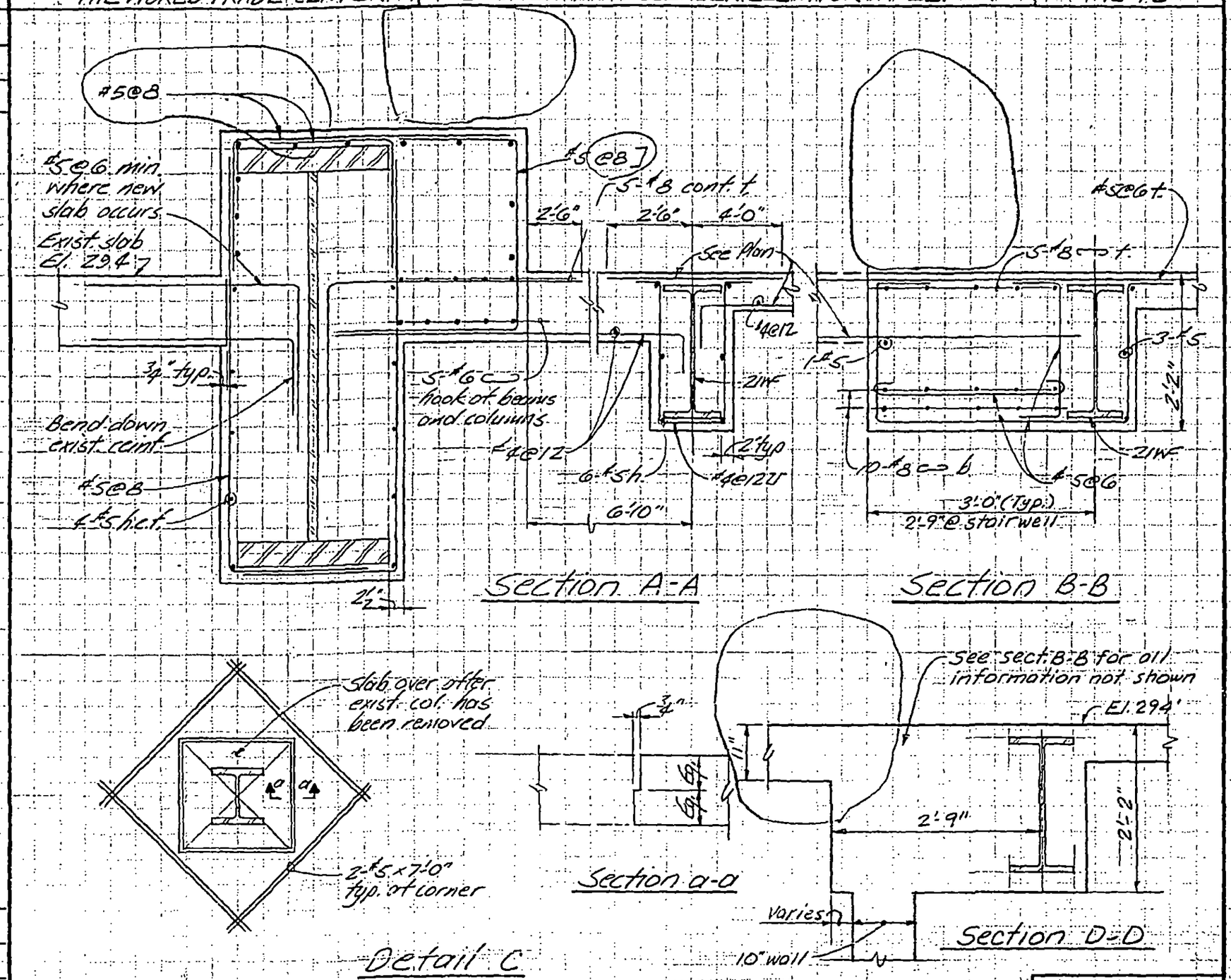

LICENSED PROFESSIONAL ENGINEER — LESLIE E. ROBERTSON — No 34360 — UNIVERSITY OF THE STATE OF NEW YORK

DESIGNED

DRAWN: J. Adams

REVIEWED: W. Brewer

8-JKB-66

SKILLING, HELLE, CHRISTIANSEN, ROBERTSON — Structural & Civil Engineers

PROJECT: THE WORLD TRADE CENTER | TITLE: STAIR AT TOWERS | DATE: 7-27-73

REVISIONS

10-11-73

(A) 8½" 1'-0"

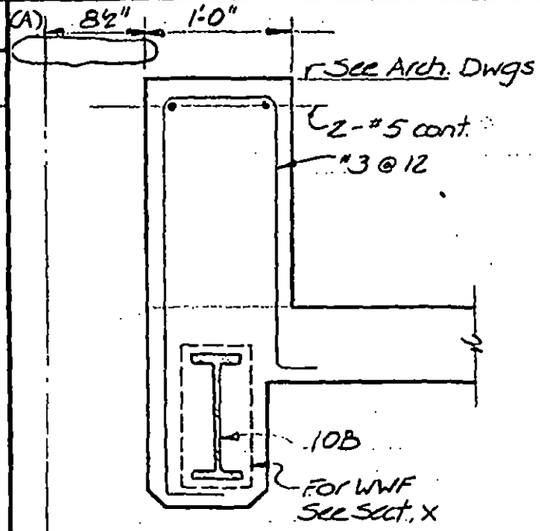

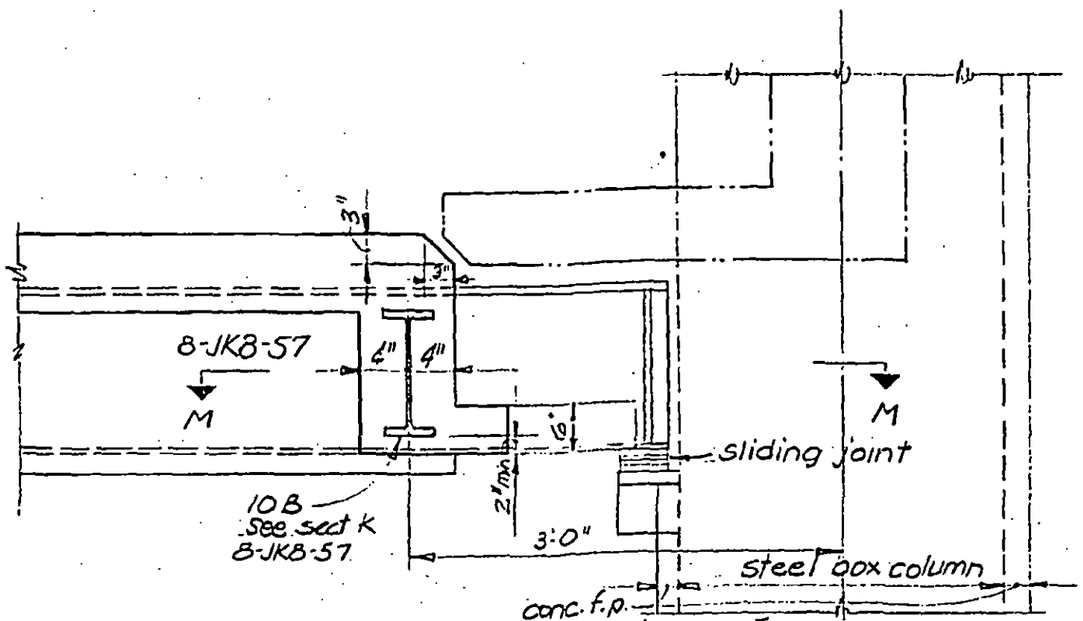

A

℄ Steel hangers

(B) 8½"
(H) 6½"
1'-0"

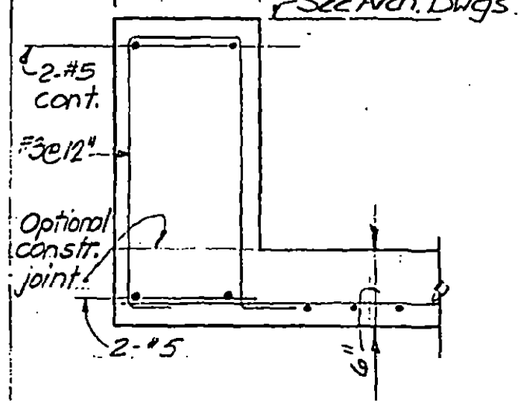

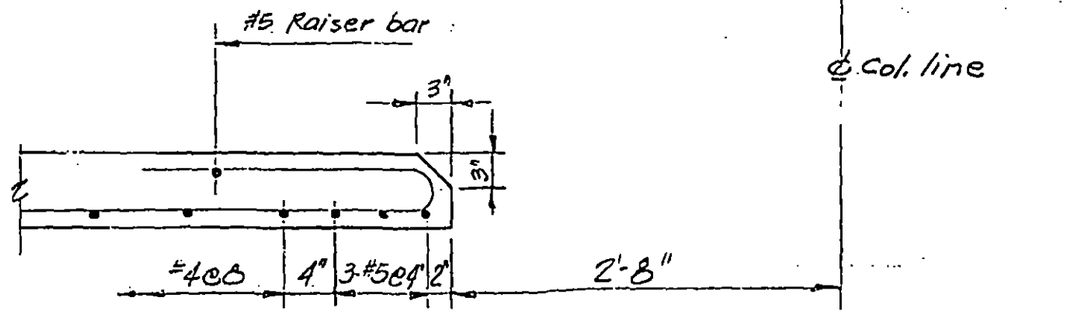

B

H

8JK8-68.1

LICENSED PROFESSIONAL ENGINEER LESLIE E. ROBERTSON No. 34360 UNIVERSITY OF THE STATE OF NEW YORK

DESIGNED WAB

DRAWN

REVIEWED JTM

SKILLING, HELLE, CHRISTIANSEN, ROBERTSON — Structural & Civil Engineers

PROJECT: THE WORLD TRADE CENTER | TITLE: STAIR AT TOWERS | DATE: 7-27-73

REVISIONS

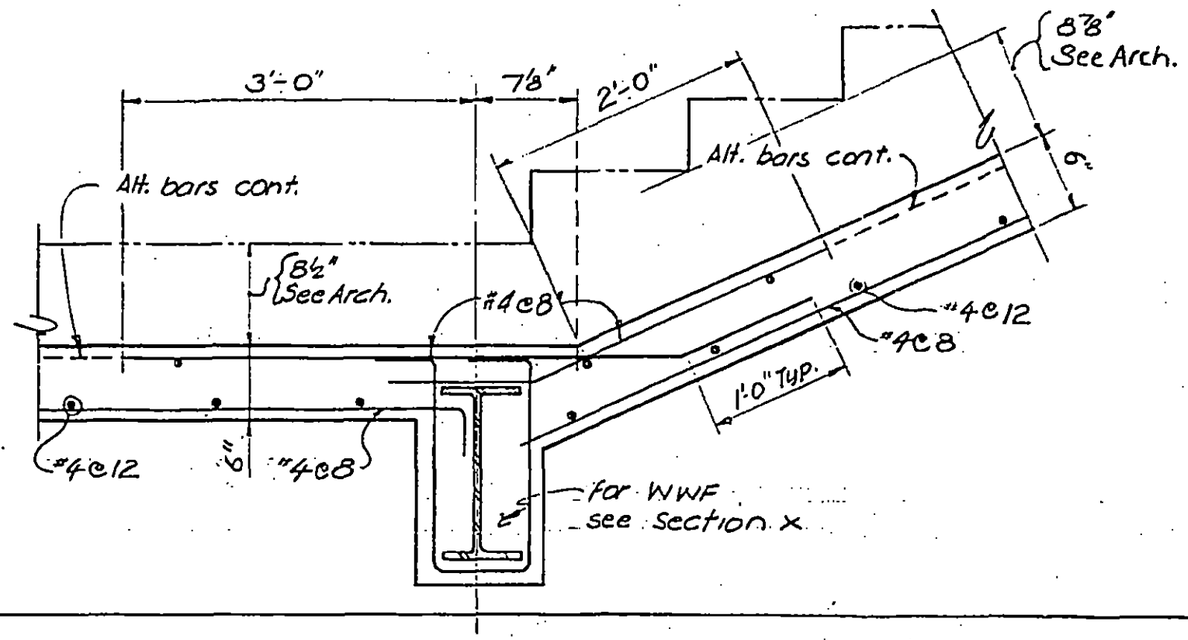

8JK8-68.2

LICENSED PROFESSIONAL ENGINEER LESLIE E. ROBERTSON No. 34560 UNIVERSITY OF THE STATE OF NEW YORK

DESIGNED: WAB

DRAWN: [signature]

REVIEWED: JTM

SKILLING, HELLE, CHRISTIANSEN, ROBERTSON — Structural & Civil Engineers

PROJECT: THE WORLD TRADE CENTER | TITLE: STAIR AT TOWERS | DATE: 7-27-73

REVISIONS

12-19-73

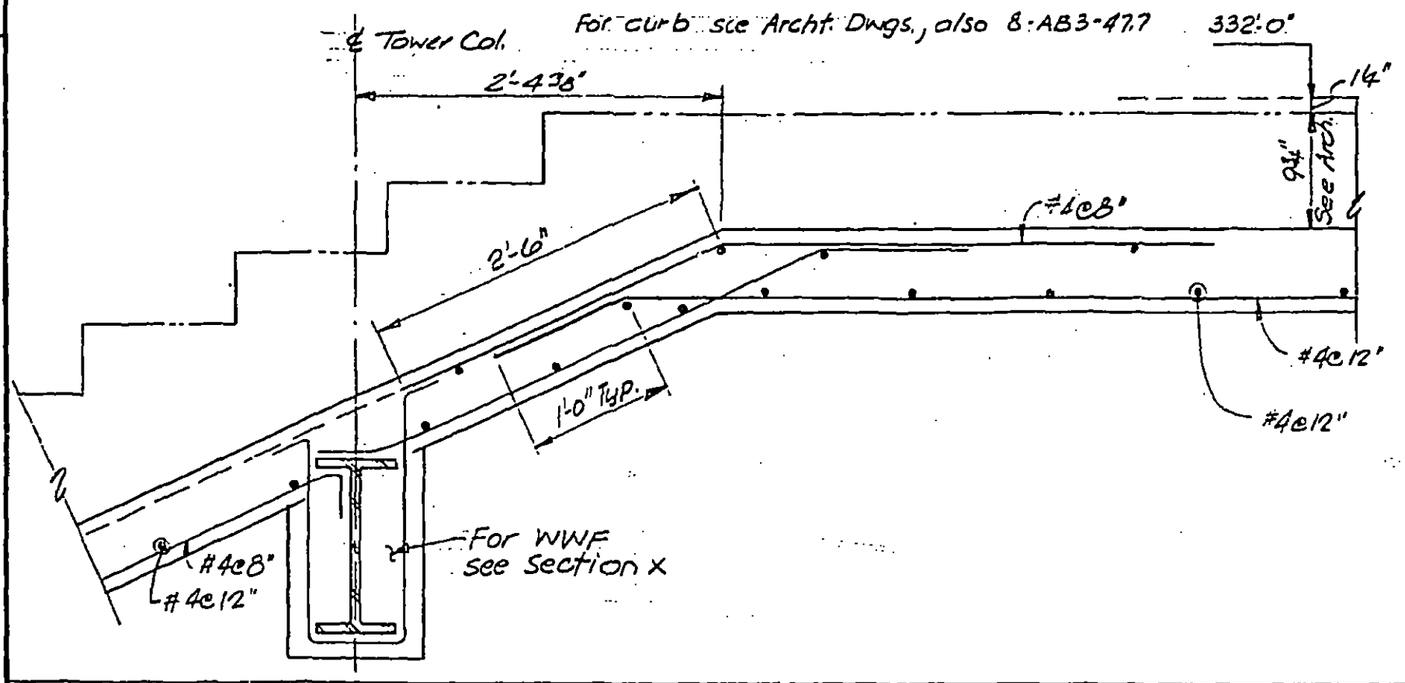

E

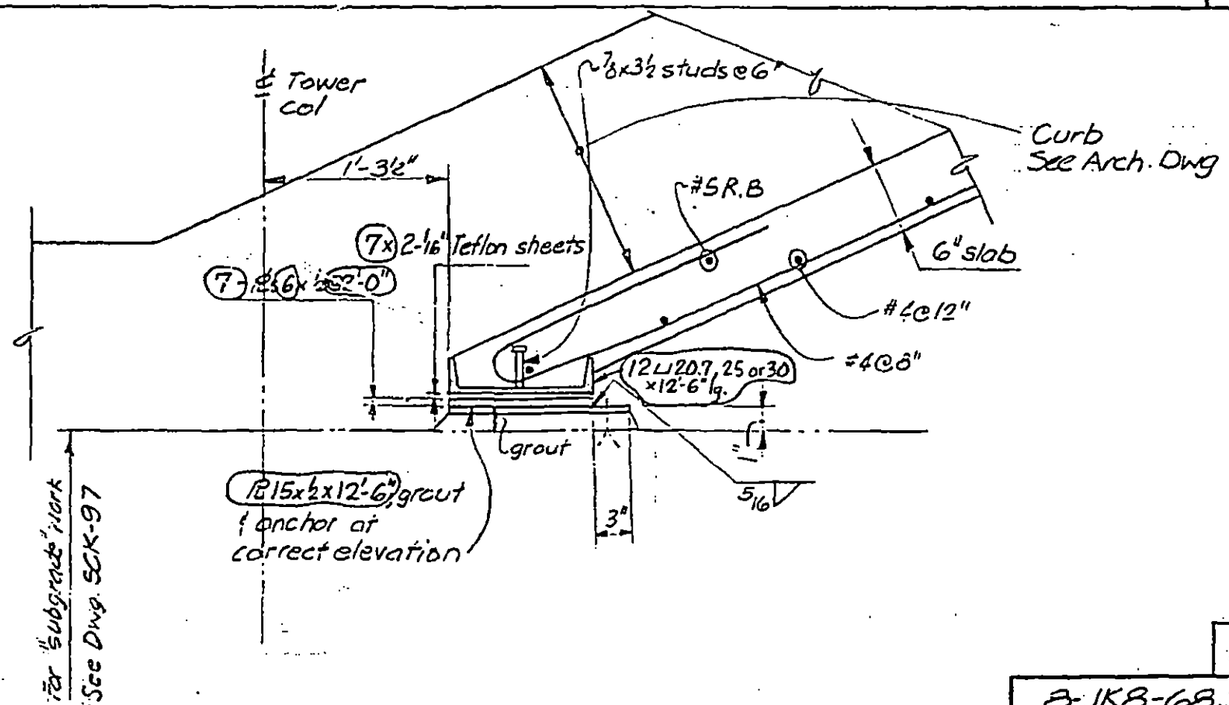

F

8-JK8-68.3

LICENSED PROFESSIONAL ENGINEER — LESLIE E. ROBERTSON — No 34360 — UNIVERSITY OF THE STATE OF NEW YORK

DESIGNED: WAB

DRAWN: [illegible]

REVIEWED: JTM

SKILLING, HELLE, CHRISTIANSEN, ROBERTSON — Structural & Civil Engineers

PROJECT: THE WORLD TRADE CENTER | TITLE: SECTIONS - EL. 332 | DATE: 10-11-73

REVISIONS

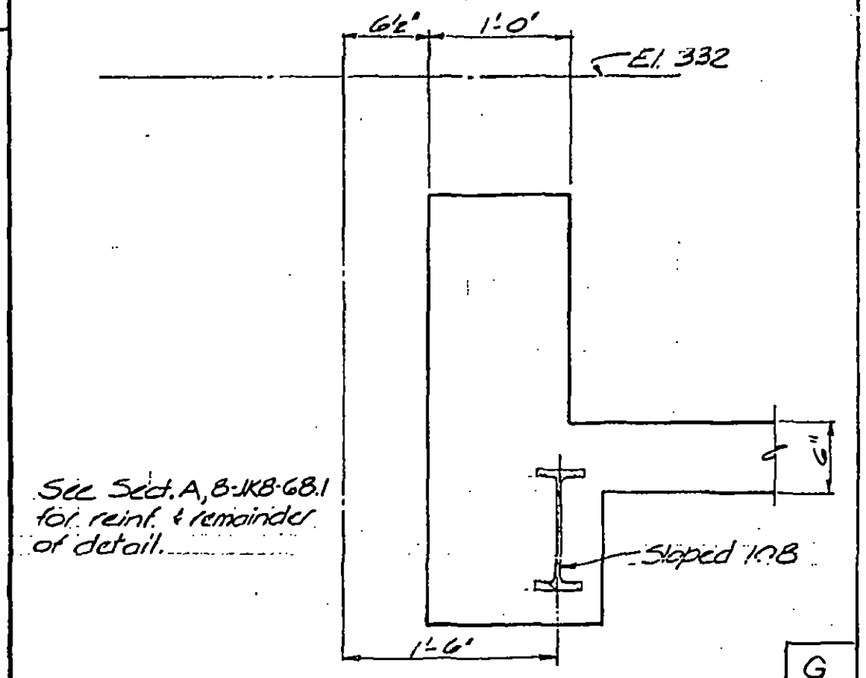

G

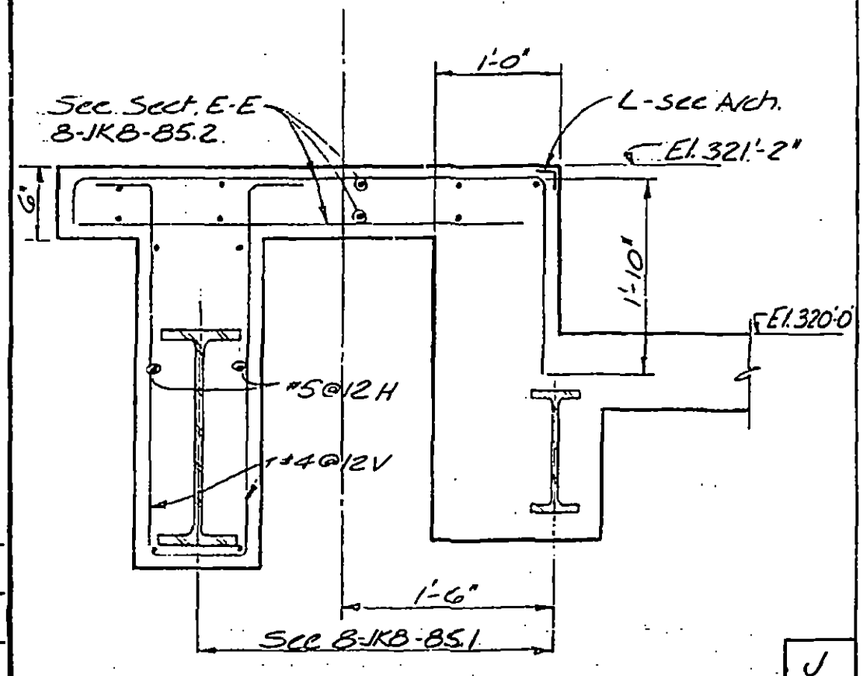

J

B-JKB-68.4

LICENSED PROFESSIONAL ENGINEER
LESLIE E. ROBERTSON
No. 34360
UNIVERSITY OF THE STATE OF NEW YORK

DESIGNED K.C.
DRAWN J.B.
REVIEWED

SKILLING, HELLE, CHRISTIANSEN, ROBERTSON — Structural & Civil Engineers

PROJECT: WORLD TRADE CENTER | TITLE: SECTIONS El. 332 | DATE: 7-27-73

REVISIONS
9-19-73
4-5-74

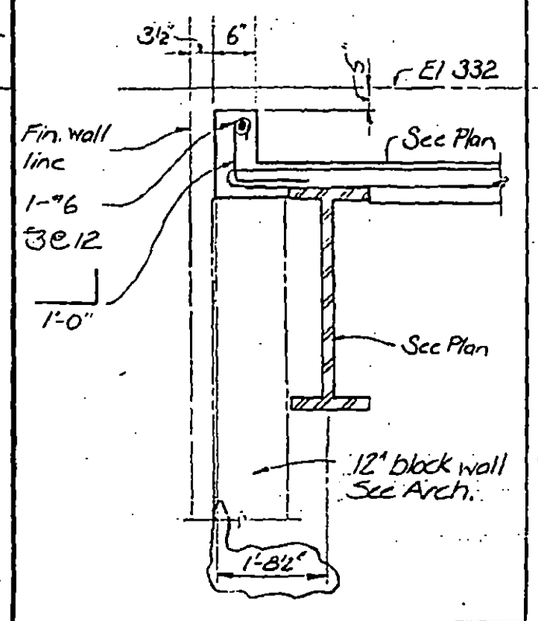

A

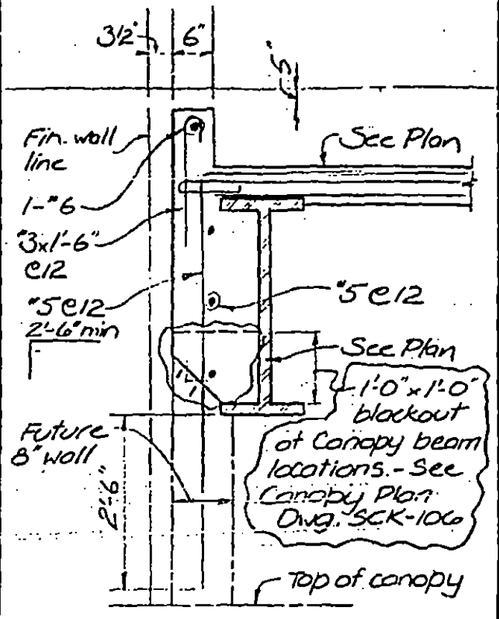

B

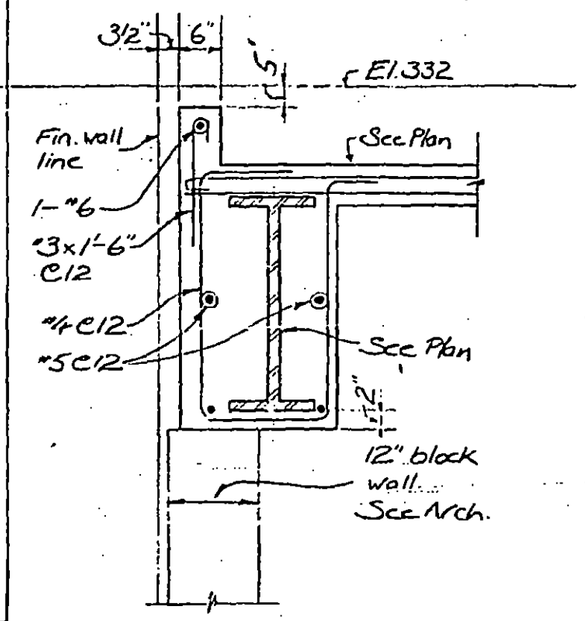

C

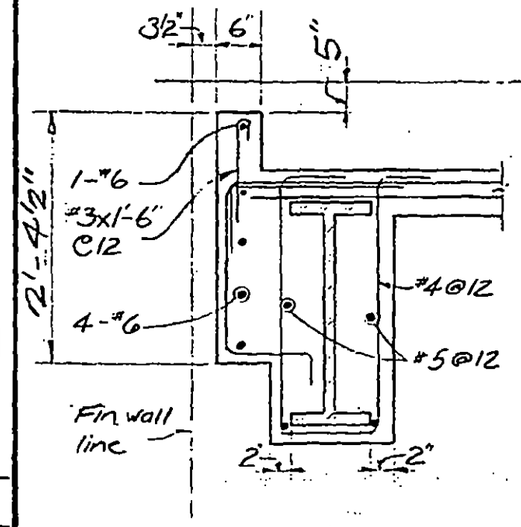

D

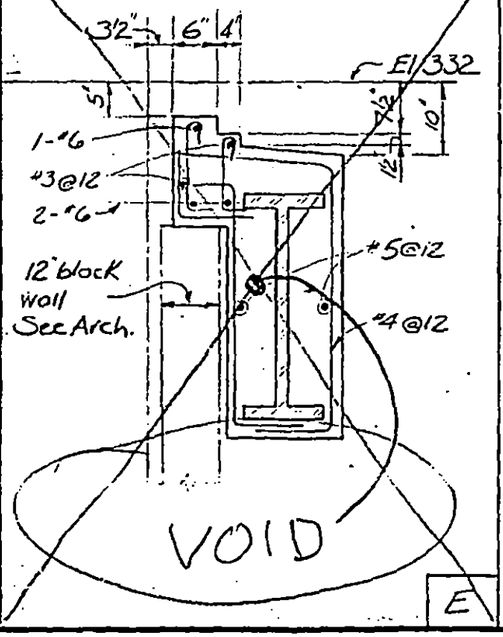

E

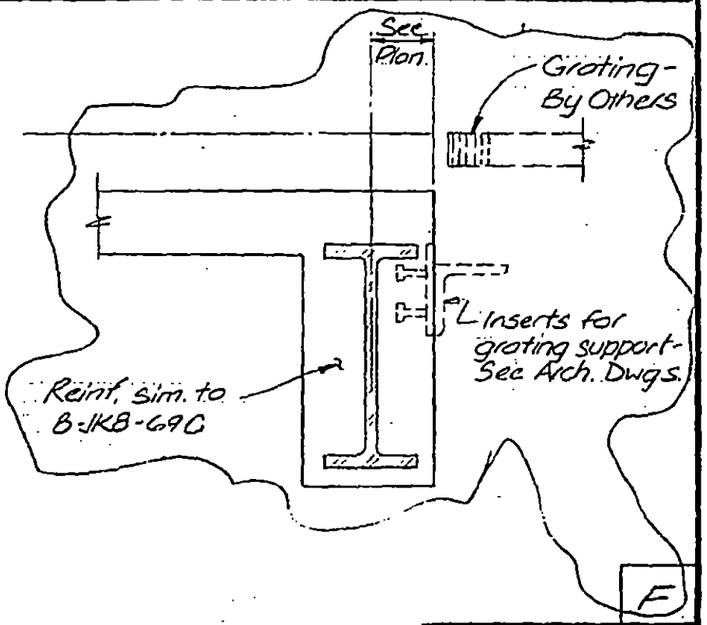

F

8-JK8-69.1

LICENSED PROFESSIONAL ENGINEER — LESLIE E. ROBERTSON — No. 34360 — UNIVERSITY OF THE STATE OF NEW YORK

DESIGNED: NAB
DRAWN: J Banks
REVIEWED: JTM

SKILLING, HELLE, CHRISTIANSEN, ROBERTSON — Structural & Civil Engineers

PROJECT: THE WORLD TRADE CENTER

TITLE: SECTIONS - EL. 332

DATE: 7-27-73

REVISIONS

9-19-73

4-5-74

10-21-74

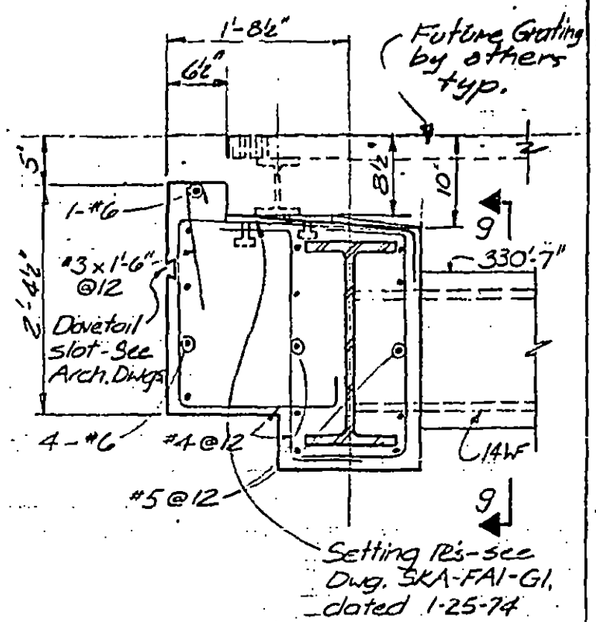

G

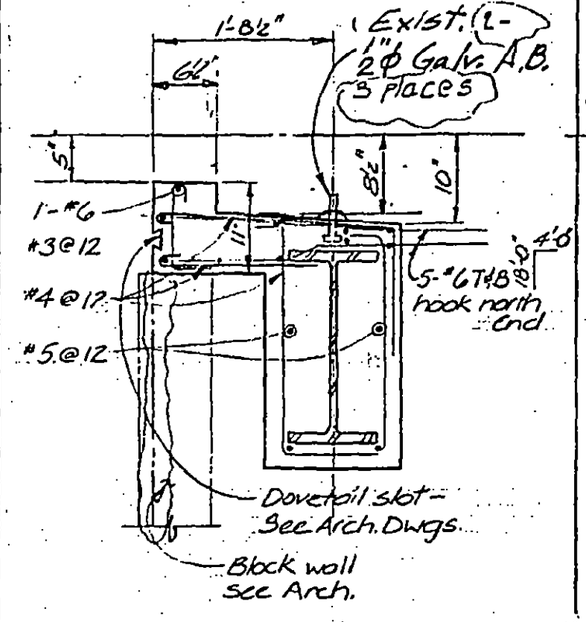

H

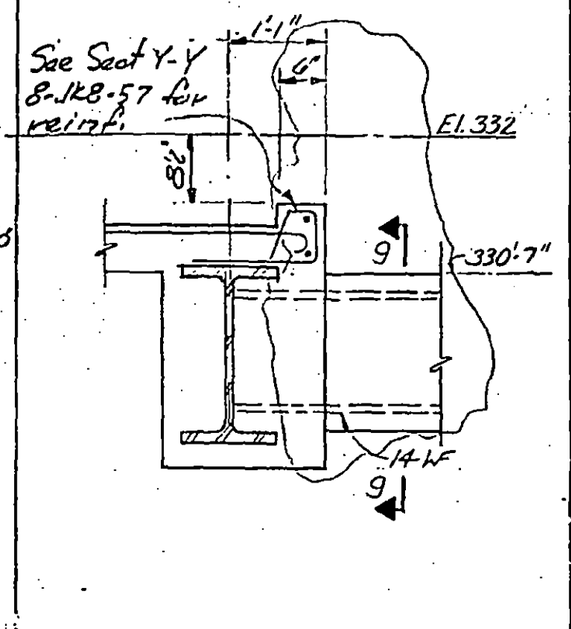

J

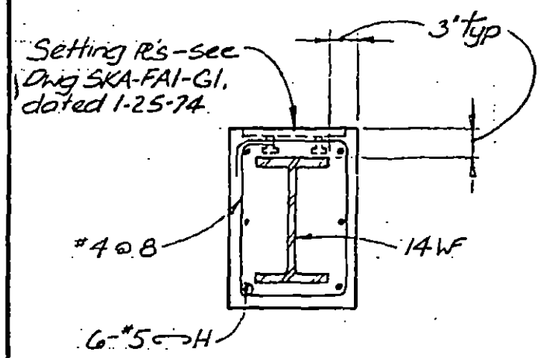

9

8-JK8-69.2

LICENSED PROFESSIONAL ENGINEER
LESLIE E. ROBERTSON
No. 34360
UNIVERSITY OF THE STATE OF NEW YORK

DESIGNED WAB

DRAWN J Banks

REVIEWED JTM

SKILLING, HELLE, CHRISTIANSEN, ROBERTSON — Structural & Civil Engineers

PROJECT THE WORLD TRADE CENTER | TITLE SECTIONS - EL. 332 | DATE 10-11-73.

REVISIONS
4-5-74
10/21/74

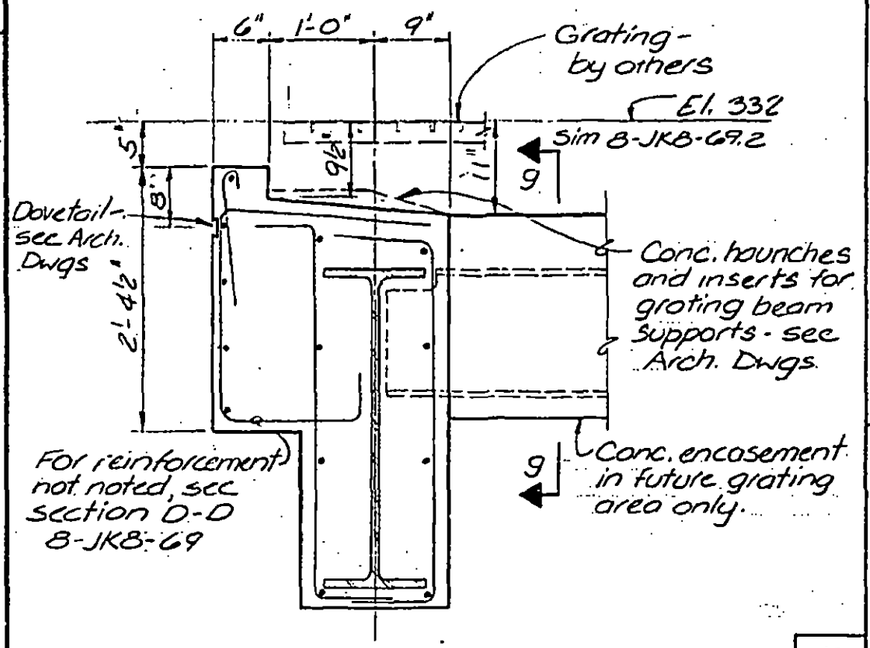

K

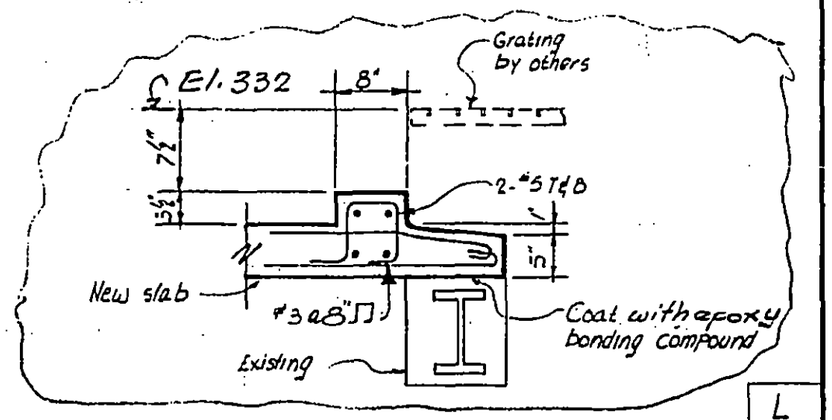

L

Note 7. Remove existing concrete without damage to exist. reinforcing.
Clean face of exist. concrete and throughly coat entire surface with epoxy bonding compound.

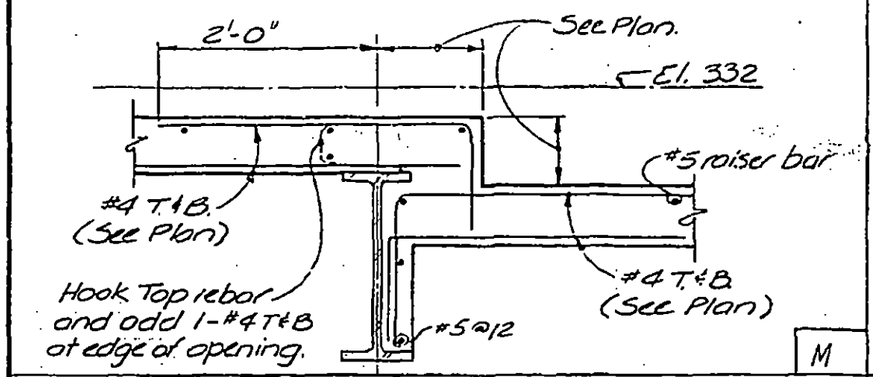

M

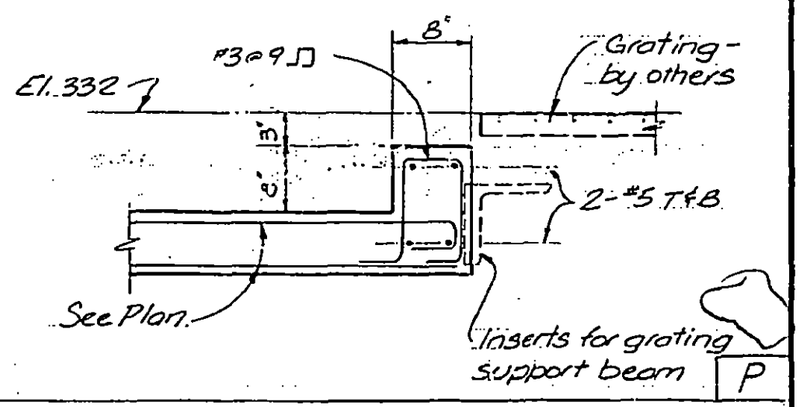

P

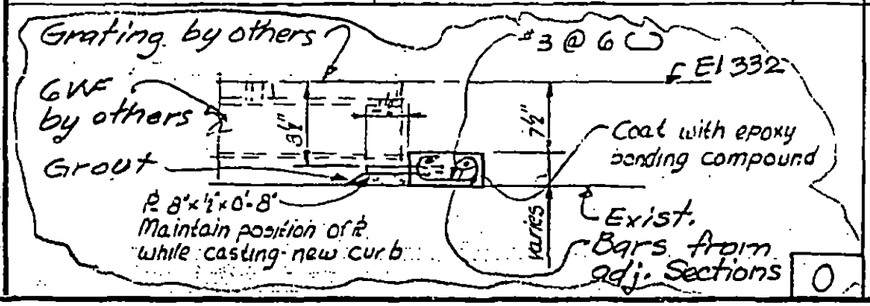

O

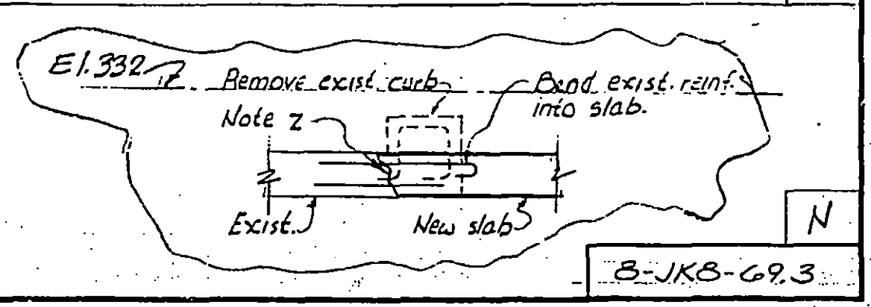

N

8-JK8-69.3

LICENSED PROFESSIONAL ENGINEER — LESLIE E. ROBERTSON — No. 34360 — UNIVERSITY OF THE STATE OF NEW YORK

DESIGNED K.C.
DRAWN J.B.
REVIEWED J.T.M.

SKILLING, HELLE, CHRISTIANSEN, ROBERTSON | Structural & Civil Engineers

PROJECT WORLD TRADE CENTER | TITLE SECTION EL. 332 | DATE 10-21-74

REVISIONS

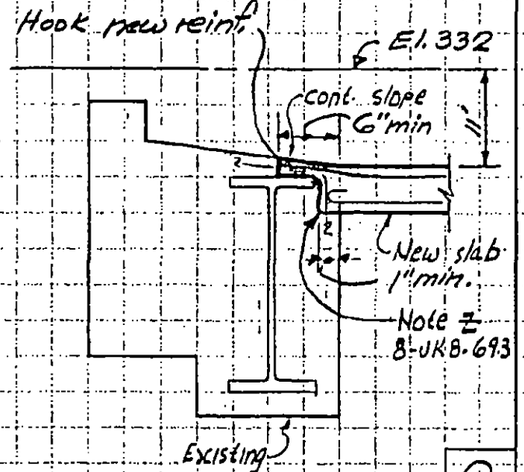

Q

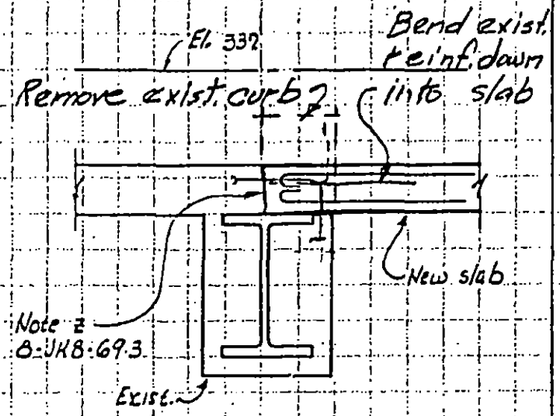

R

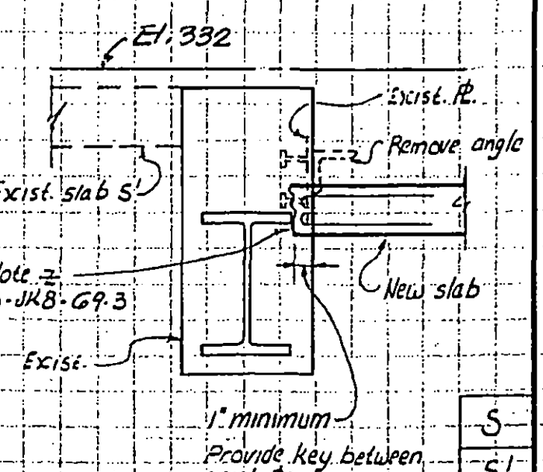

S
S'

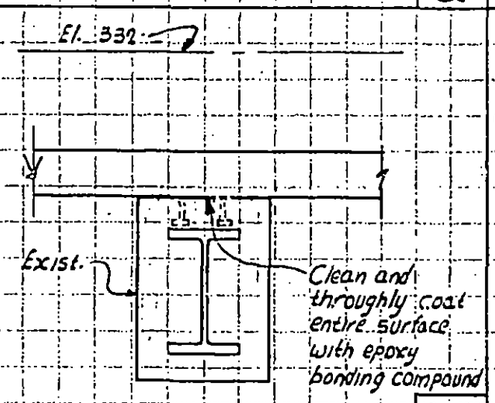

T

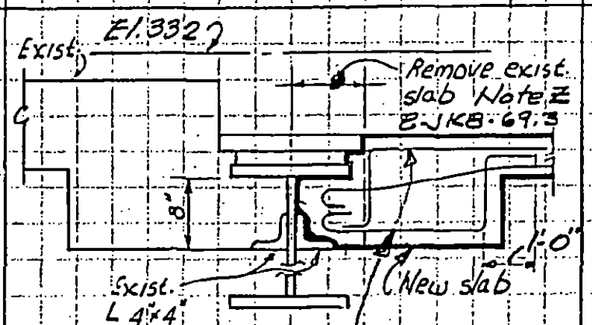

V

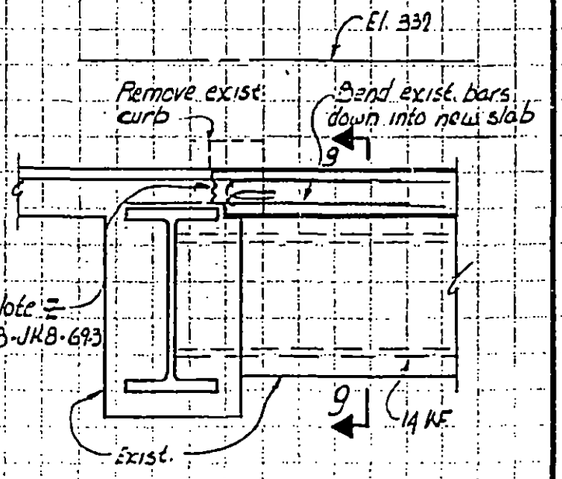

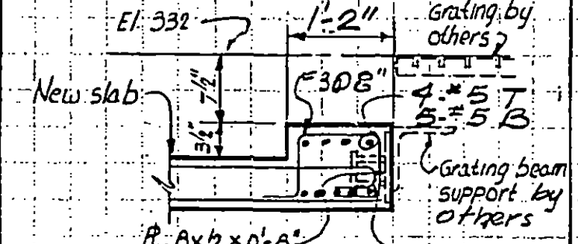

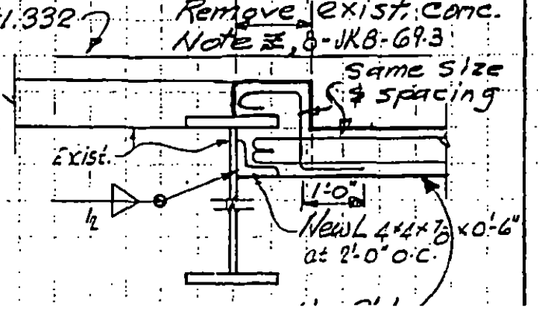

LICENSED PROFESSIONAL ENGINEER
LESLIE E. ROBERTSON
No. 34360
UNIVERSITY OF THE STATE OF NEW YORK

DESIGNED JTM

SKILLING, HELLE, CHRISTIANSEN, ROBERTSON — Structural & Civil Engineers

PROJECT THE WORLD TRADE CENTER | TITLE SECTIONS EL.332 | DATE 7-27-73

REVISIONS
9-19-73
4-5-74

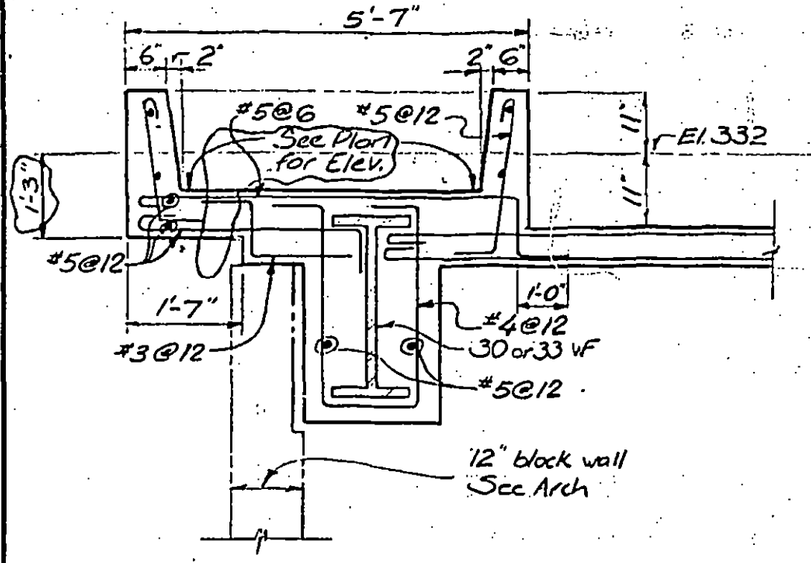

A

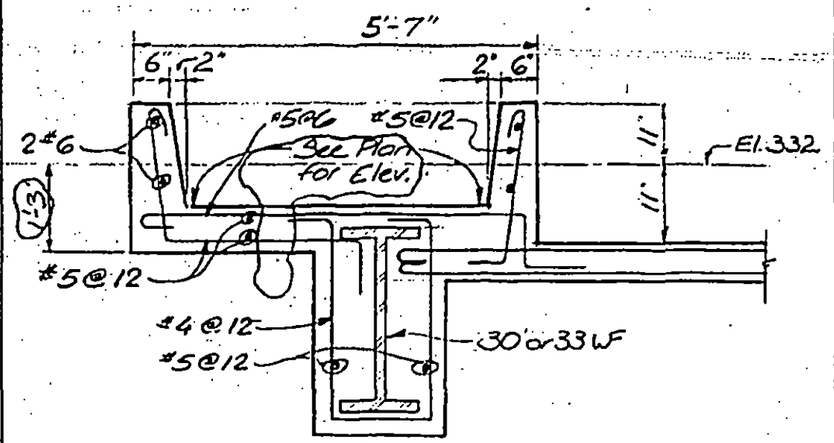

B

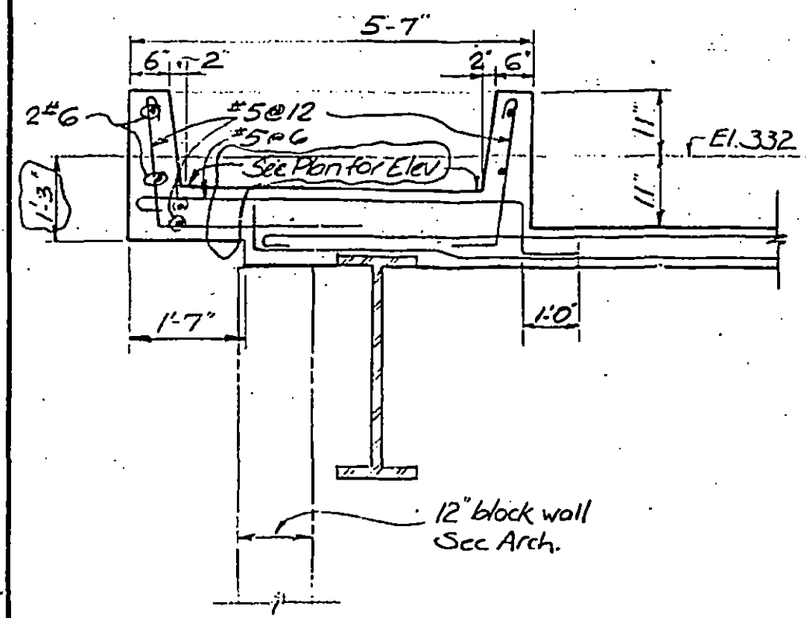

C

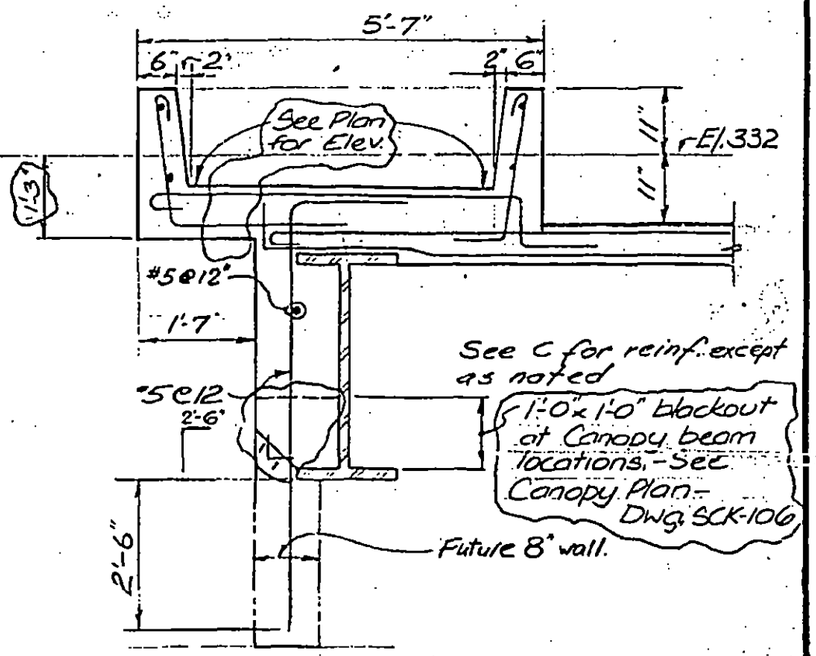

D

8-JK8-70

LICENSED PROFESSIONAL ENGINEER
LESLIE E. ROBERTSON
No. 34360
UNIVERSITY OF THE STATE OF NEW YORK

DESIGNED WAB
DRAWN J. Banks.
REVIEWED JTM

SKILLING, HELLE, CHRISTIANSEN, ROBERTSON — Structural & Civil Engineers

PROJECT THE WORLD TRADE CENTER | TITLE SECTION - EL. 332 | DATE 7-27-73

REVISIONS

9-6-73

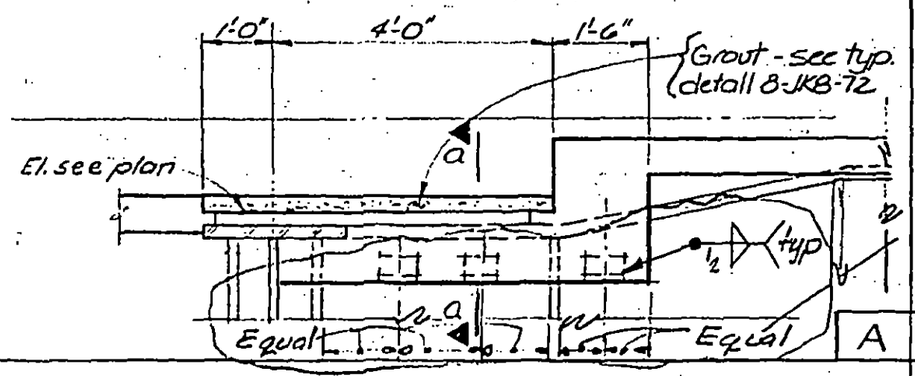

A a

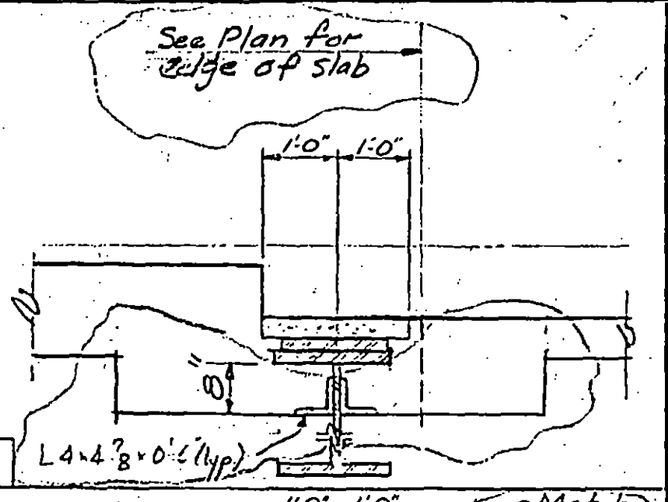

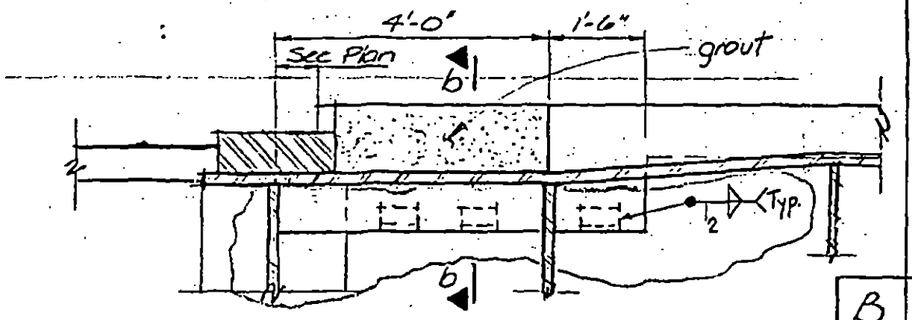

B b

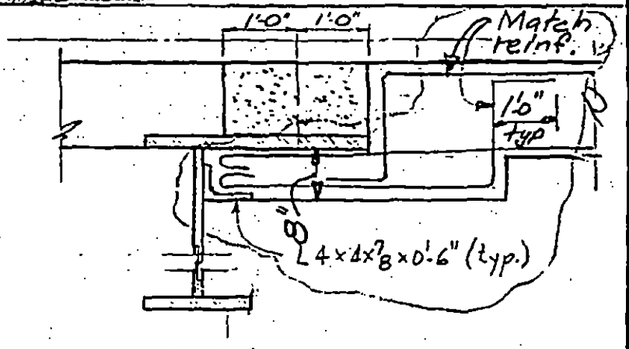

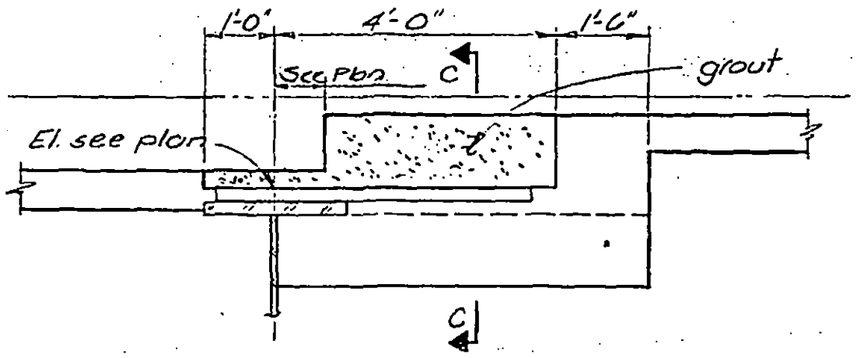

C c

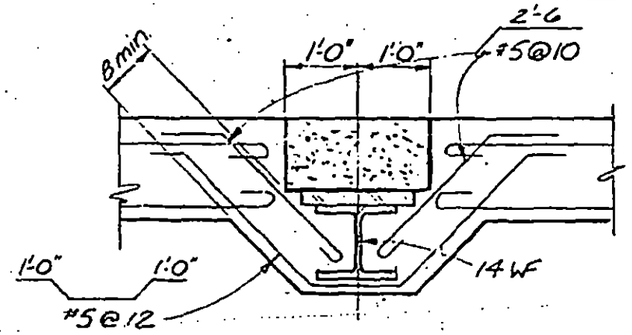

8-JK-8-71.1

LICENSED PROFESSIONAL ENGINEER — LESLIE E. ROBERTSON — No. 34360 — UNIVERSITY OF THE STATE OF NEW YORK

DESIGNED WAB

DRAWN TR

REVIEWED JTM

SKILLING, HELLE, CHRISTIANSEN, ROBERTSON — Structural & Civil Engineers

PROJECT: THE WORLD TRADE CENTER | TITLE: SECTIONS EL. 332 | DATE: 7-27-73

REVISIONS

10-11-73

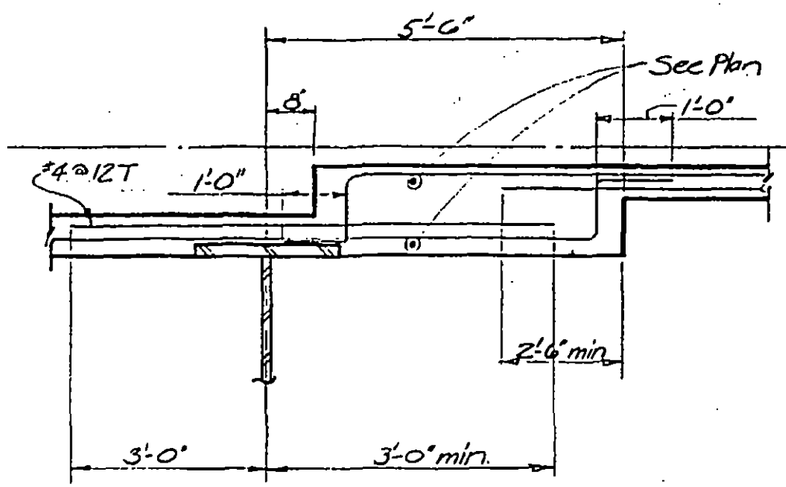

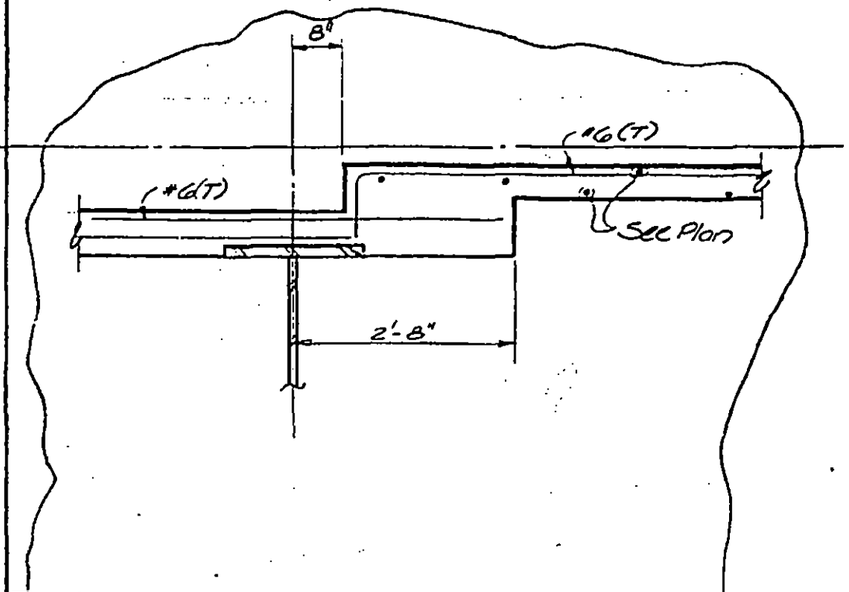

E F

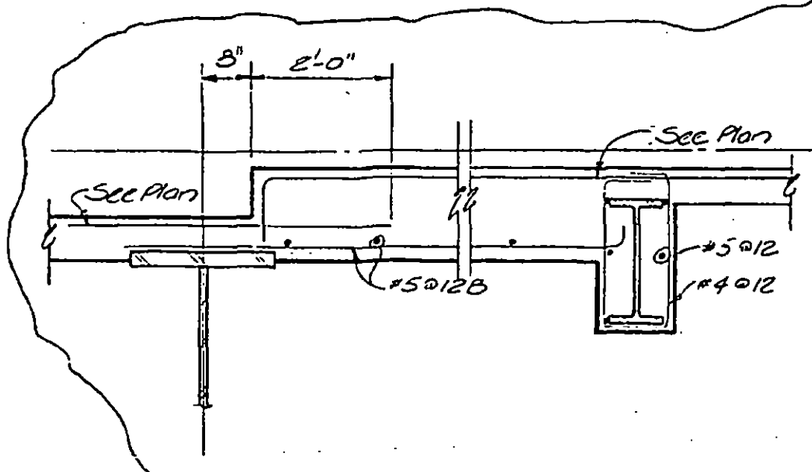

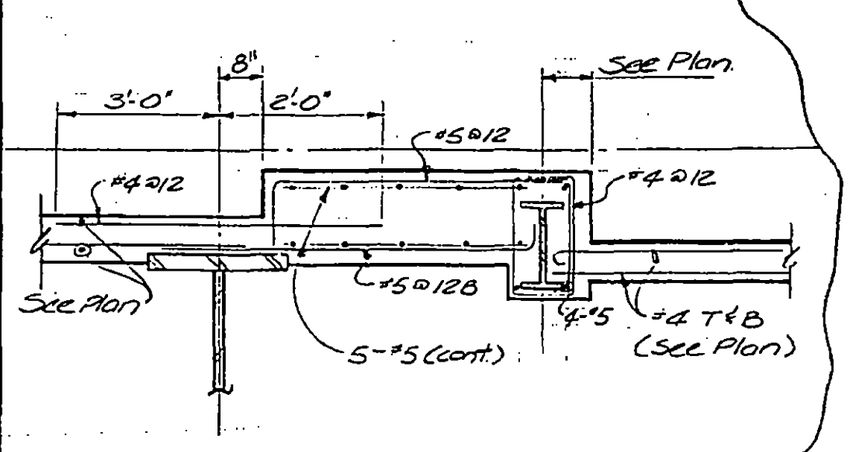

LICENSED PROFESSIONAL ENGINEER
LESLIE E. ROBERTSON
No 34360
UNIVERSITY OF THE STATE OF NEW YORK

DESIGNED WAB

SKILLING, HELLE, CHRISTIANSEN, ROBERTSON — Structural & Civil Engineers

PROJECT THE WORLD TRADE CENTER | TITLE SECTIONS - EL. 332 | DATE 10-11-73

REVISIONS

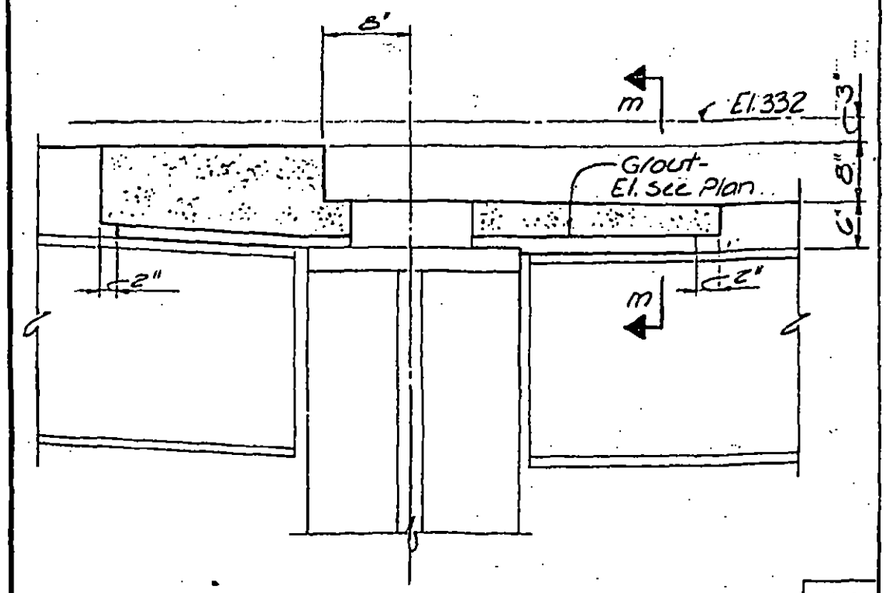

M

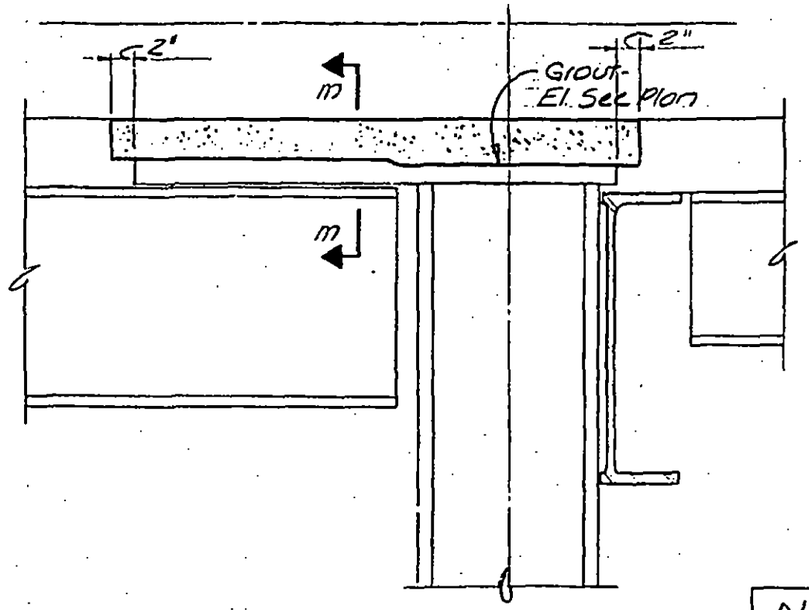

N

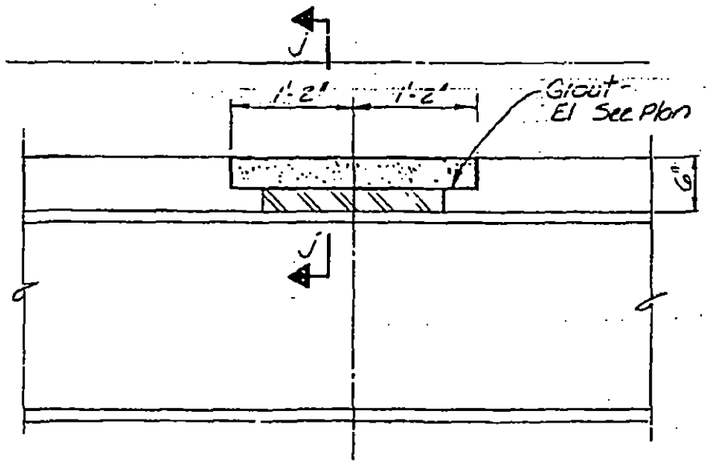

K
J

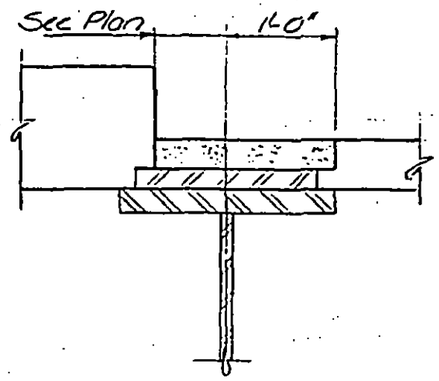

j

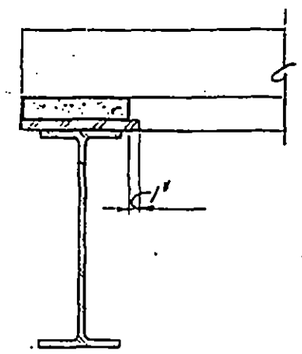

m

Note : For typical grout detail, see 8-JK8-72.1

8-JK8-71.3

LICENSED PROFESSIONAL ENGINEER
LESLIE E. ROBERTSON
No. 34360
UNIVERSITY OF THE STATE OF NEW YORK

DESIGNED K.C.
DRAWN J.B.
REVIEWED

SKILLING, HELLE, CHRISTIANSEN, ROBERTSON — Structural & Civil Engineers

PROJECT: THE WORLD TRADE CENTER | TITLE: SECTIONS - EL. 332 | DATE: 4-1-74

REVISIONS

4-5-74

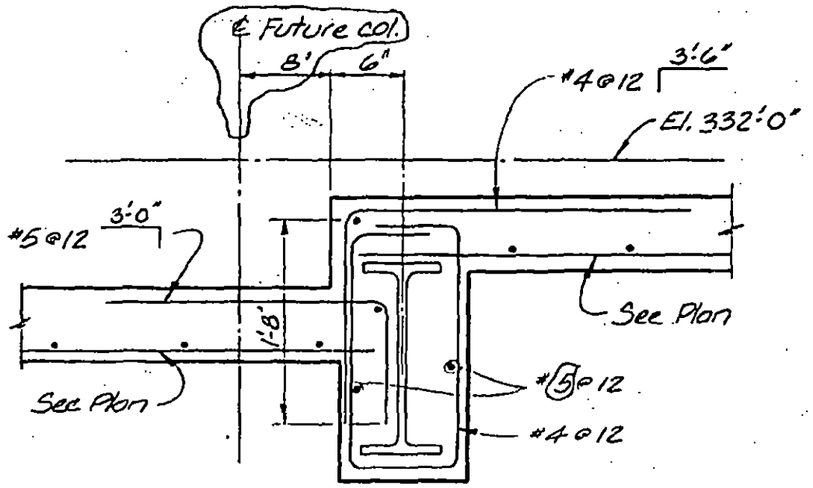

Q

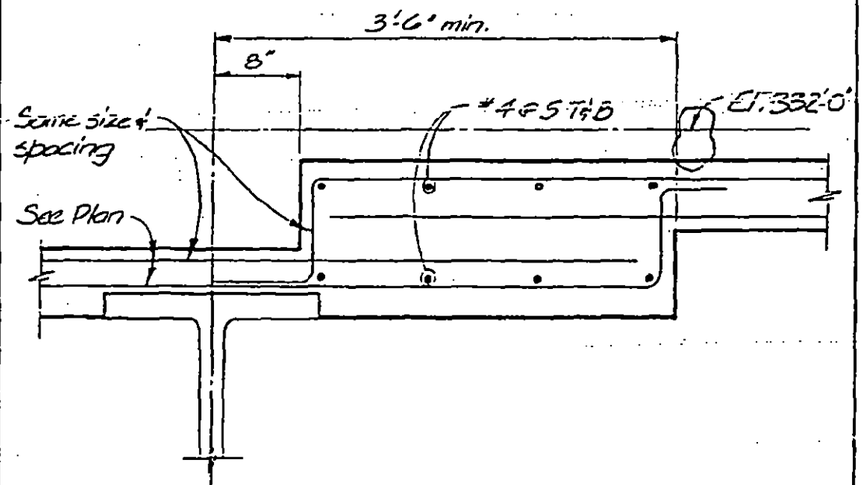

R

LICENSED PROFESSIONAL ENGINEER
LESLIE E. ROBERTSON
No. 34940
UNIVERSITY OF THE STATE OF NEW YORK

DESIGNED: J.T.M., W.A.B.
DRAWN: J.B.
REVIEWED: J.T.M.

8-JKB-71.4

SKILLING, HELLE, CHRISTIANSEN, ROBERTSON — Structural & Civil Engineers

PROJECT THE WORLD TRADE CENTER | TITLE SECTIONS - EL.332 | DATE 7-27-73

REVISIONS

10-11-73

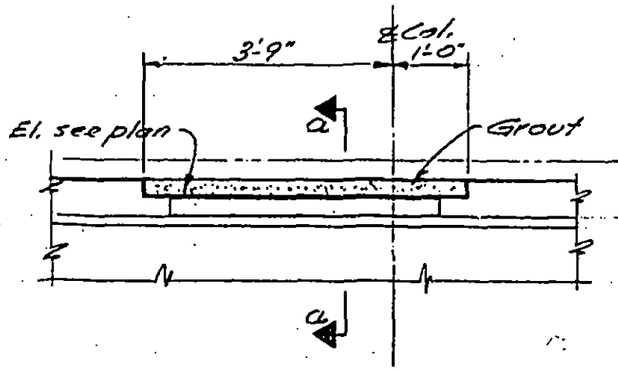

A a

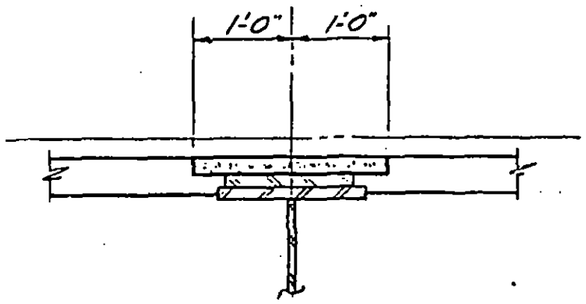

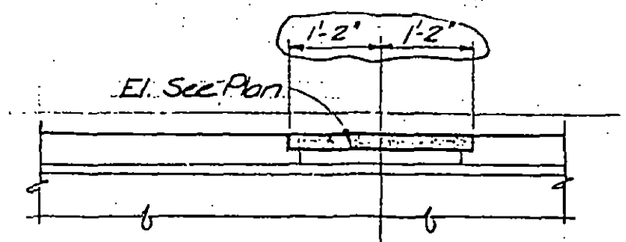

B

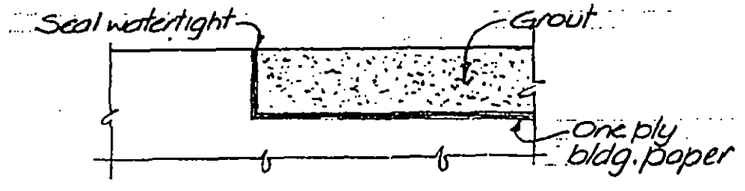

Note: Install this detail when instructed by the Engineer
Typical of Grout 8-JK8-71 & 72

TYPICAL GROUT DETAIL

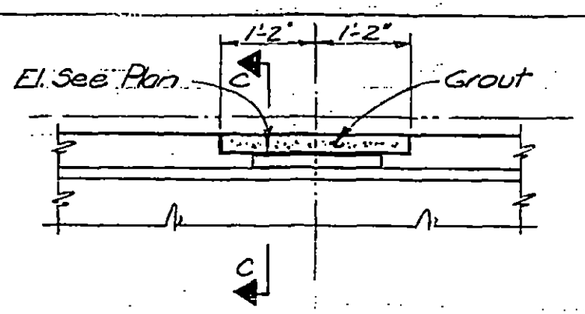

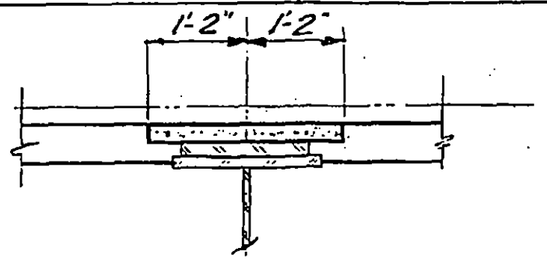

E

C c

8-JK8-72.1

LICENSED PROFESSIONAL ENGINEER
LESLIE E. ROBERTSON
No. 34360
UNIVERSITY OF THE STATE OF NEW YORK

DESIGNED WAB
DRAWN TR
REVIEWED JTM

SKILLING, HELLE, CHRISTIANSEN, ROBERTSON — Structural & Civil Engineers

PROJECT THE WORLD TRADE CENTER | TITLE SECTIONS - EL. 332 | DATE 10-11-73

REVISIONS

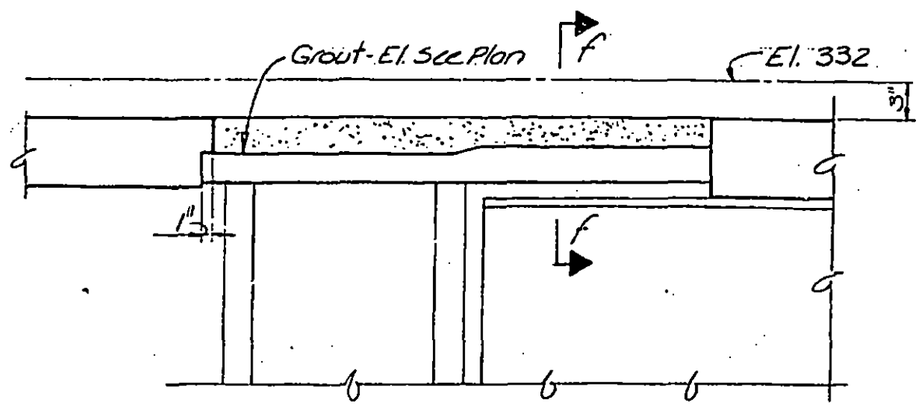

F f

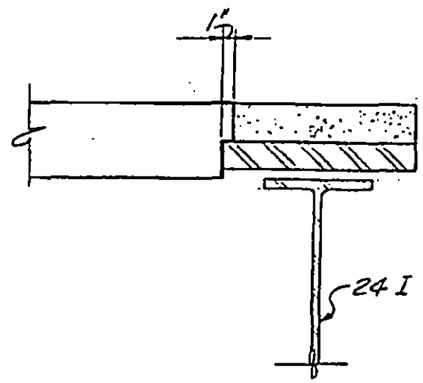

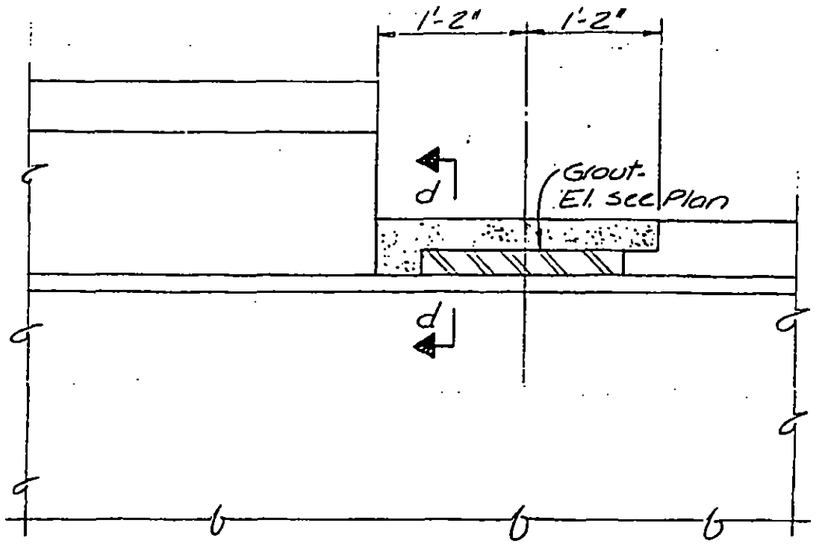

D d

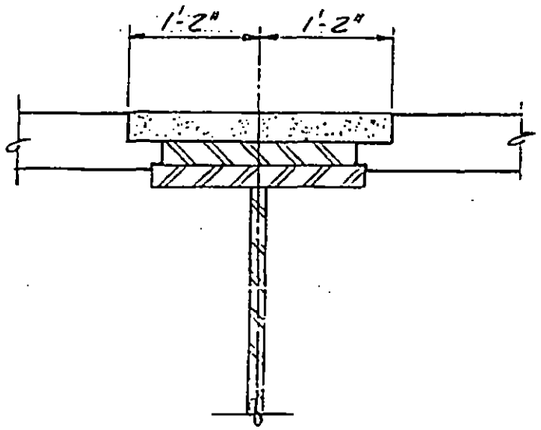

8-JKB-72.2

LICENSED PROFESSIONAL ENGINEER
LESLIE E. ROBERTSON
No. 34360
UNIVERSITY OF THE STATE OF NEW YORK

DESIGNED K.C.
DRAWN J.B.
REVIEWED

SKILLING, HELLE, CHRISTIANSEN, ROBERTSON — Structural & Civil Engineers

PROJECT: THE WORLD TRADE CENTER | TITLE: SECTIONS - EL. 332 | DATE: 4-5-74

REVISIONS

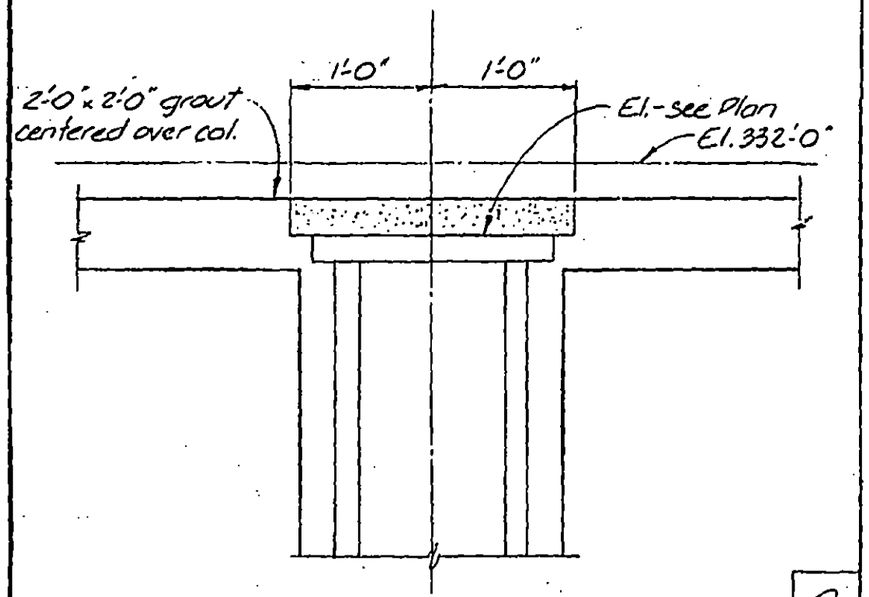

G

LICENSED PROFESSIONAL ENGINEER
LESLIE E. ROBERTSON
No. 34360
UNIVERSITY OF THE STATE OF NEW YORK

DESIGNED J.T.M.

DRAWN J.B.

REVIEWED WRB

SKILLING, HELLE, CHRISTIANSEN, ROBERTSON — Structural & Civil Engineers

PROJECT: THE WORLD TRADE CENTER | TITLE: SECTIONS - EL. 332 | DATE: 11-17-72

REVISIONS

10-11-73
Gen Rev.

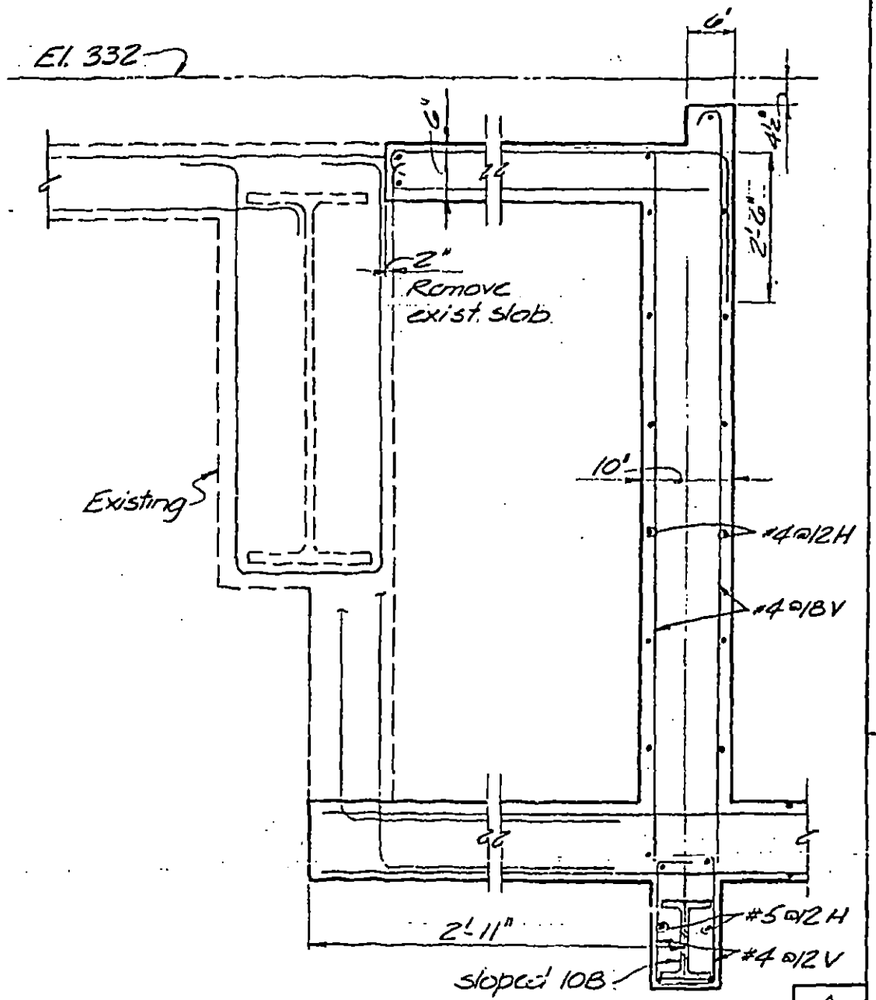

A

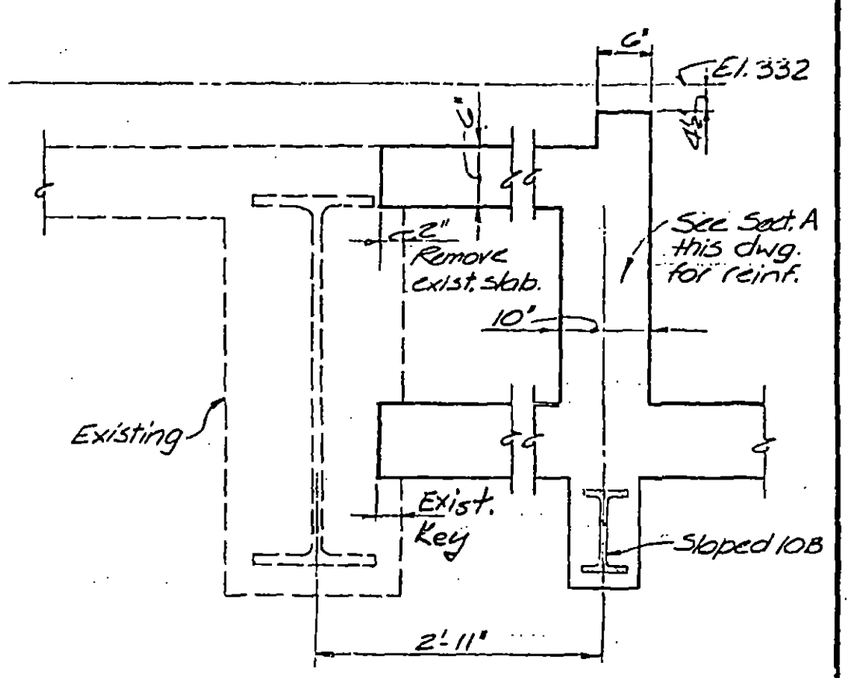

B

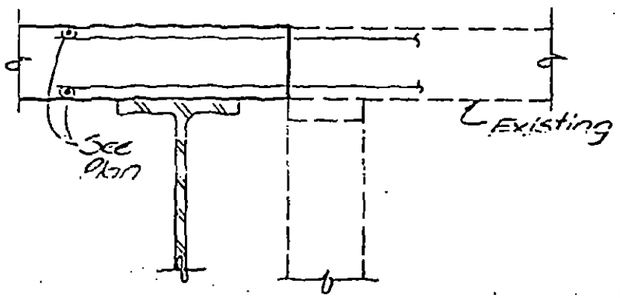

C

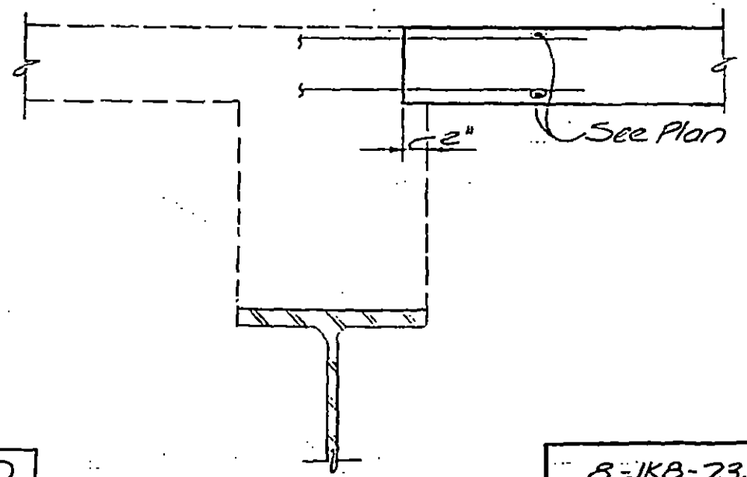

D

LICENSED PROFESSIONAL ENGINEER
LESLIE E. ROBERTSON
No. 34360
UNIVERSITY OF THE STATE OF NEW YORK

DESIGNED: WoD
DRAWN: J.B.
REVIEWED:

8-JKB-73.1

SKILLING, HELLE, CHRISTIANSEN, ROBERTSON — Structural & Civil Engineers

PROJECT THE WORLD TRADE CENTER | TITLE SECTIONS - EL. 332 | DATE 10-11-73

REVISIONS

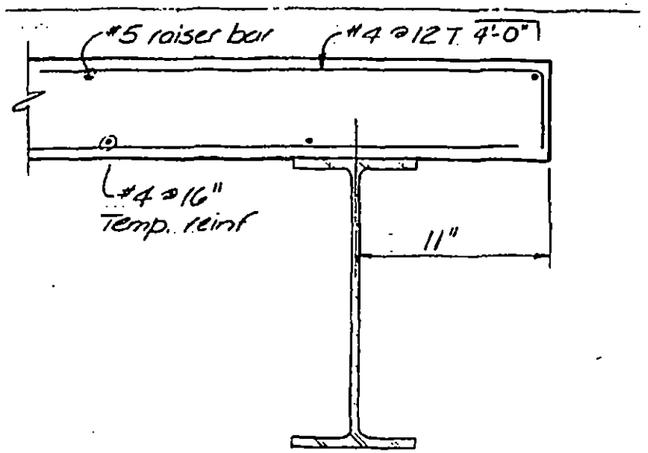

E

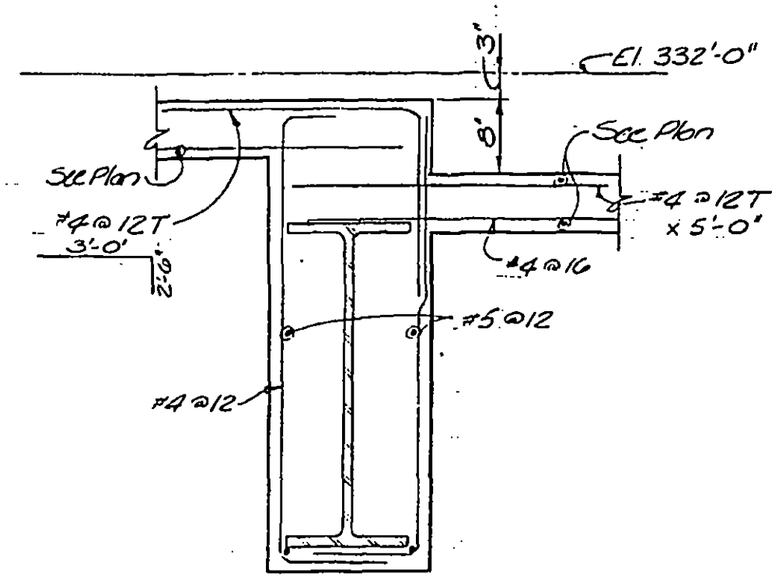

F

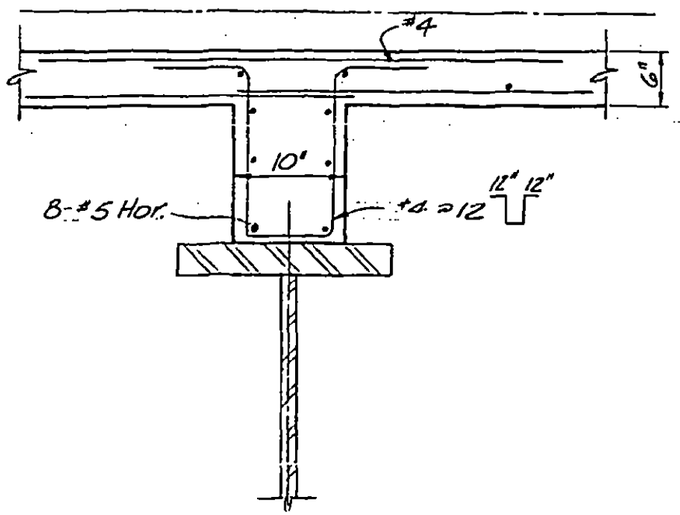

G

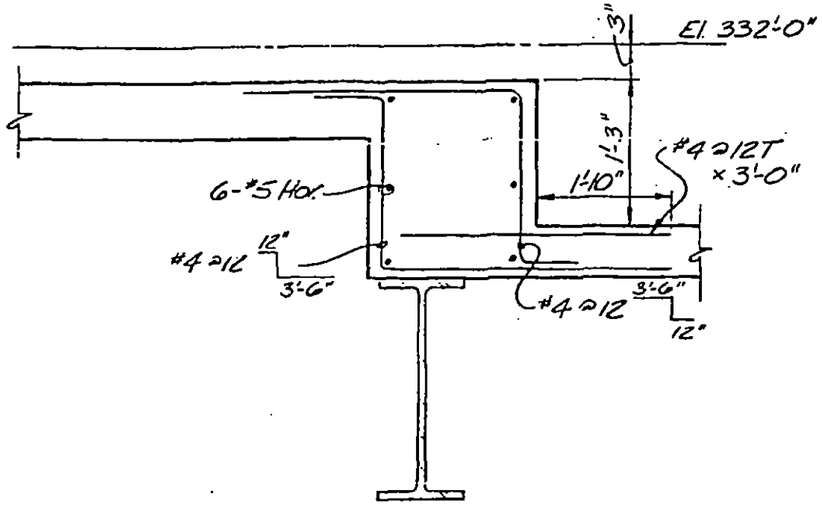

H

LICENSED PROFESSIONAL ENGINEER — LESLIE E. ROBERTSON — No. 34360 — UNIVERSITY OF THE STATE OF NEW YORK

DESIGNED K. C.

DRAWN J.B.

REVISED

8-JK8-73.2

SKILLING, HELLE, CHRISTIANSEN, ROBERTSON — Structural & Civil Engineers

PROJECT THE WORLD TRADE CENTER | TITLE SECTIONS - EL. 332 | DATE 10-11-73

REVISIONS

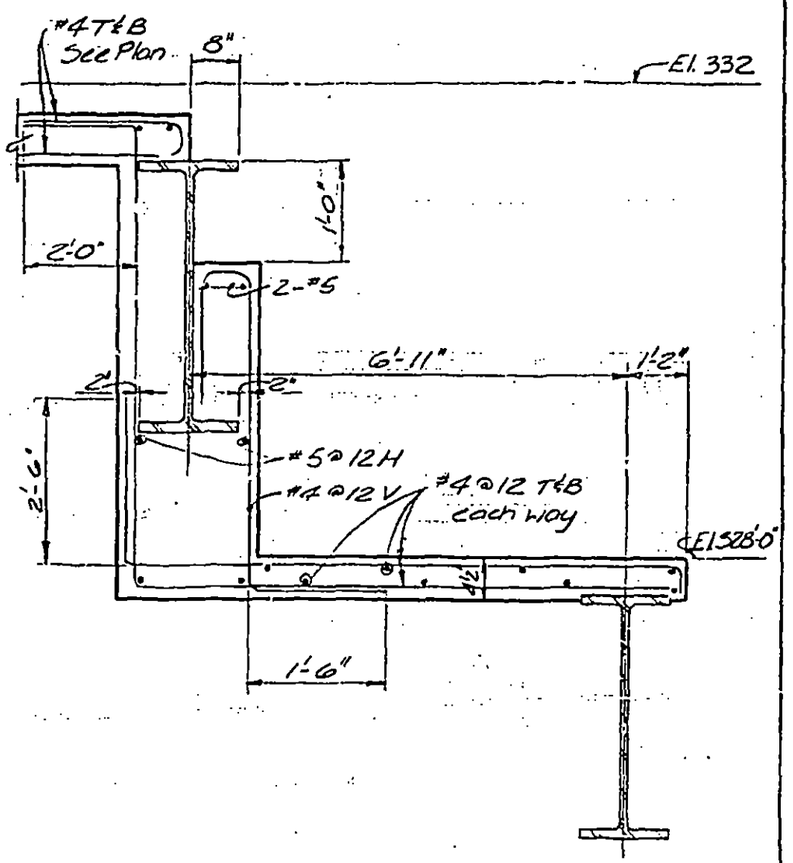

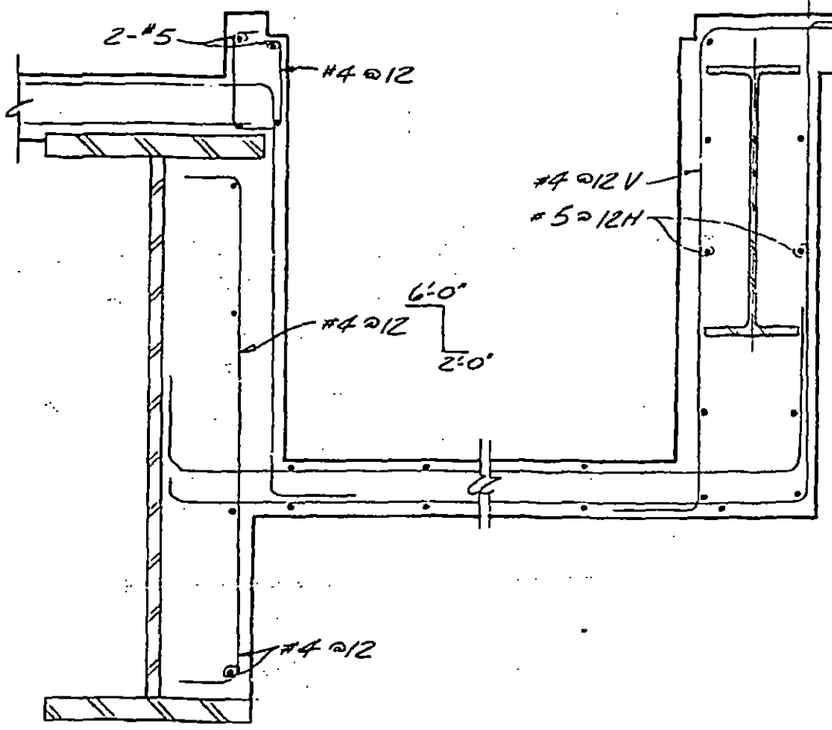

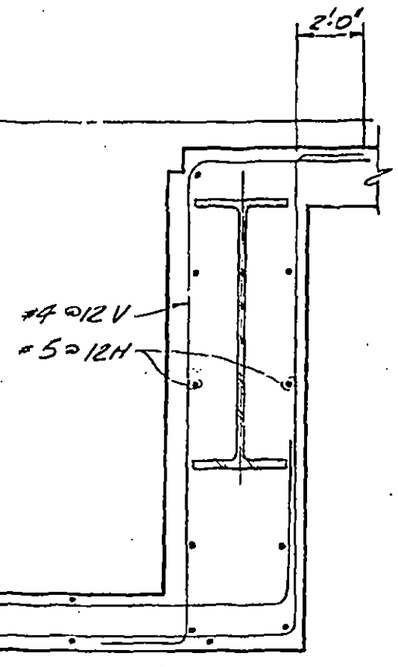

LICENSED PROFESSIONAL ENGINEER
LESLIE E. ROBERTSON
No. 34960
UNIVERSITY OF THE STATE OF NEW YORK

DESIGNED K.C.
DRAWN J.B.
REVIEWED

J | K

6-JK8-73.3

SKILLING, HELLE, CHRISTIANSEN, ROBERTSON — Structural & Civil Engineers

PROJECT: THE WORLD TRADE CENTER | TITLE: SECTIONS - EL 332 | DATE: 10-11-73

REVISIONS

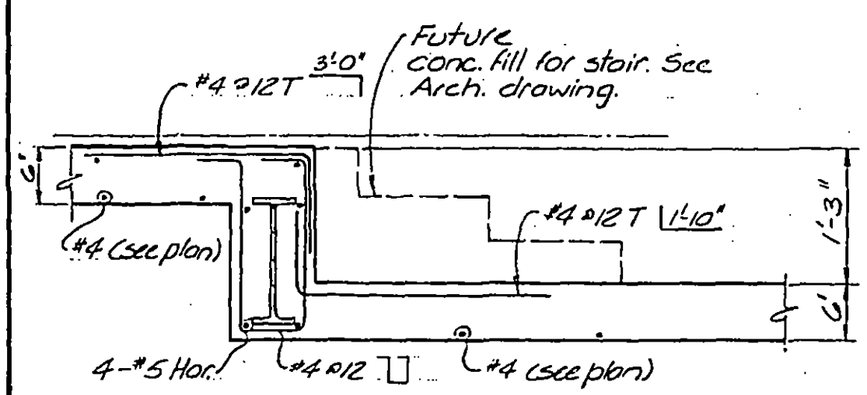

M

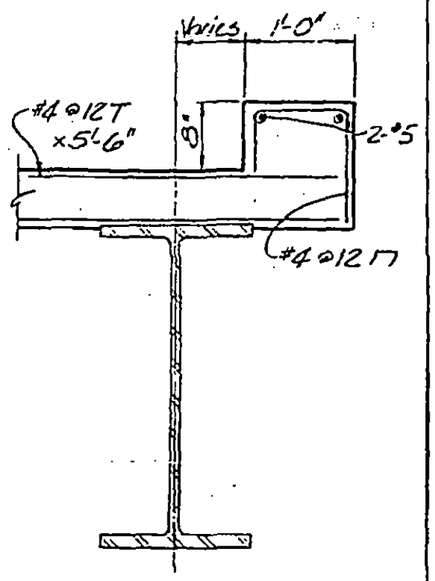

P

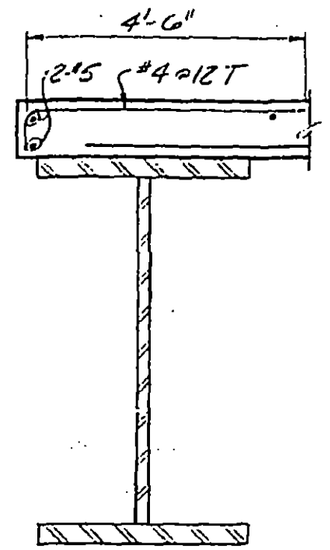

Q

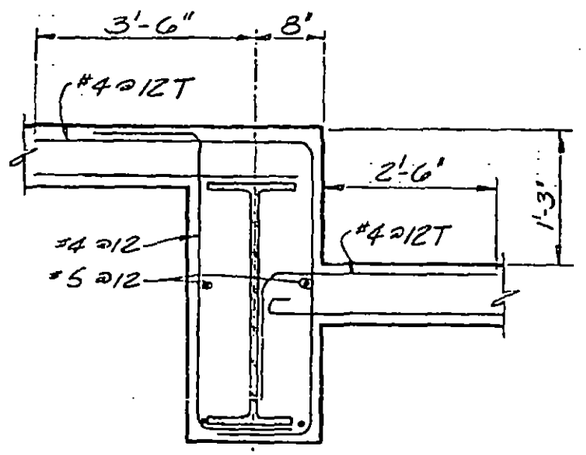

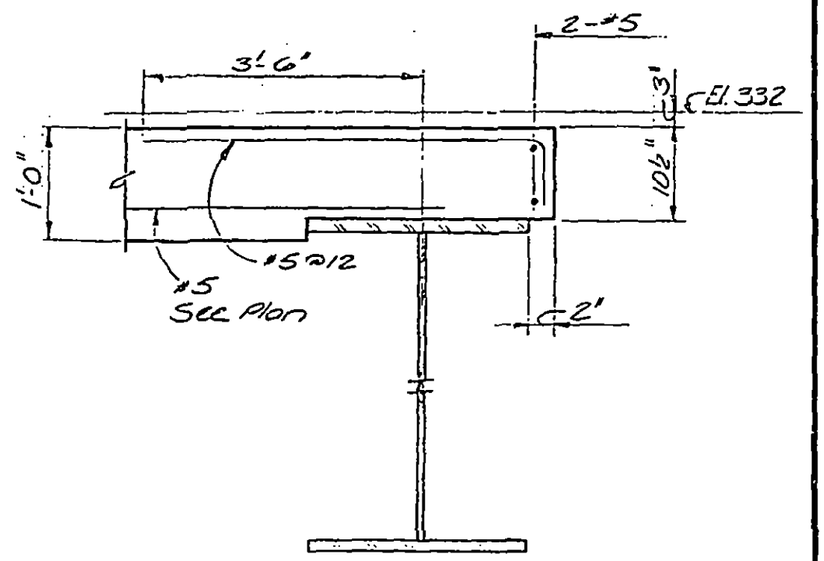

N | R

8-JK8-73.4

LICENSED PROFESSIONAL ENGINEER — LESLIE E. ROBERTSON — No 34360 — UNIVERSITY OF THE STATE OF NEW YORK

DESIGNED K.C.

DRAWN J.B.

REVIEWED

SKILLING, HELLE, CHRISTIANSEN, ROBERTSON — Structural & Civil Engineers

PROJECT: THE WORLD TRADE CENTER | TITLE: SECTIONS AT AUTO LIFT - EL. 284'-0" | DATE: 1-12-73

REVISIONS

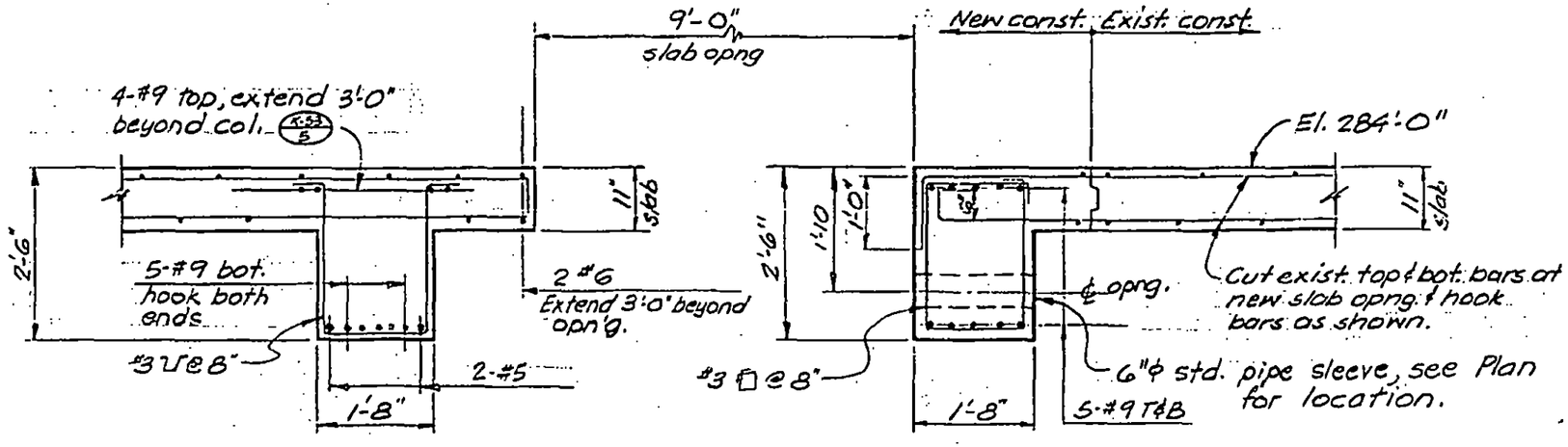

A

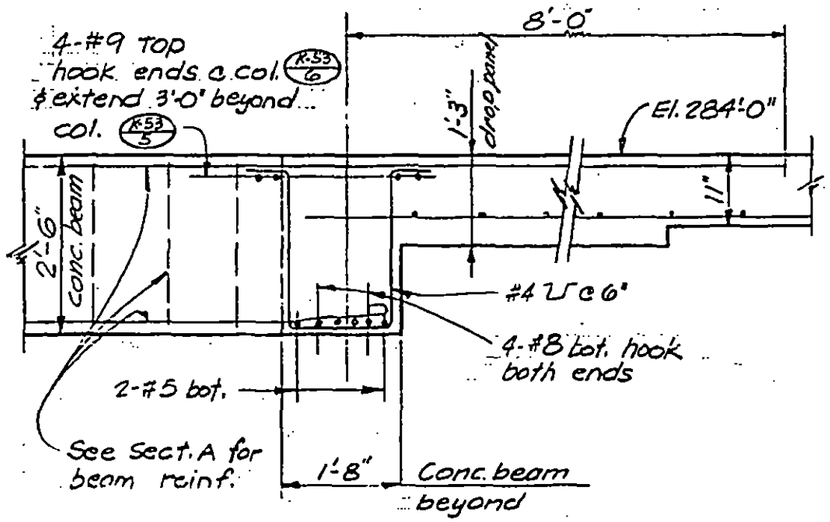

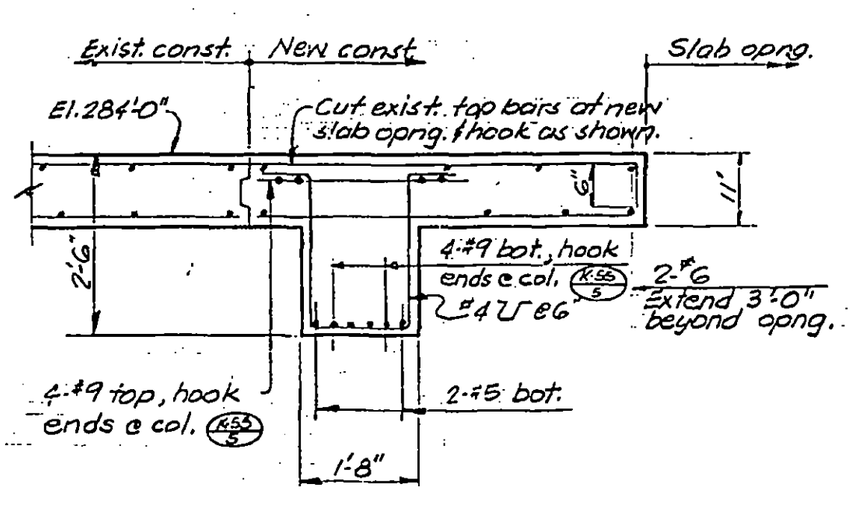

B | C

LICENSED PROFESSIONAL ENGINEER — LESLIE E. ROBERTSON — No. 34360 — UNIVERSITY OF THE STATE OF NEW YORK

DESIGNED: D.S.

DRAWN: T.R.

REVIEWED:

8-JK8-75.1

SKILLING, HELLE, CHRISTIANSEN, ROBERTSON — Structural & Civil Engineers

PROJECT THE WORLD TRADE CENTER | TITLE SECTIONS AT AUTO LIFT - EL. 284'-0" | DATE 1-12-73

REVISIONS

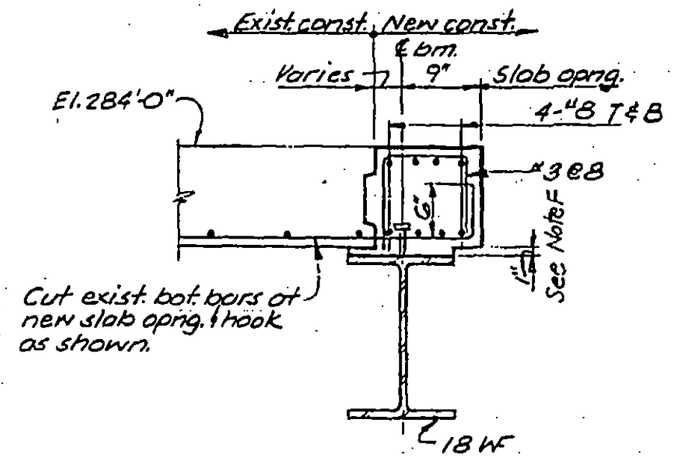

D

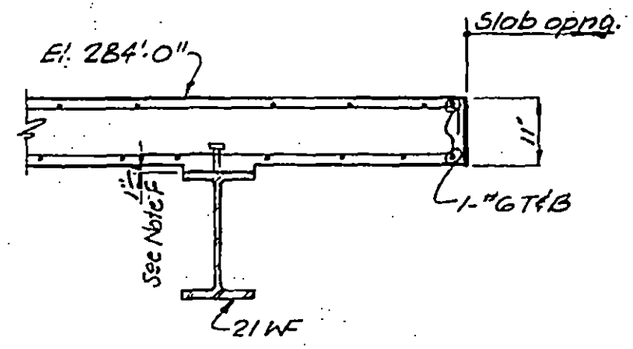

E

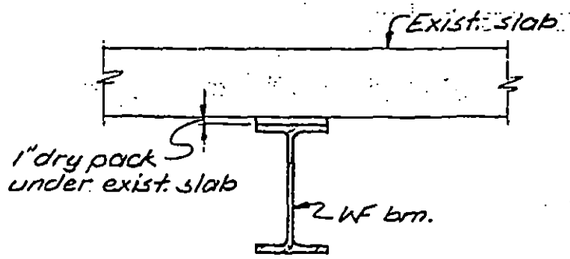

Alternate Detail If Steel Beams Are Installed After Concrete Slab Is In Place

Note F:
If this method is used for const., slab must be kept "shored" adequately along locations of future WF beams

F

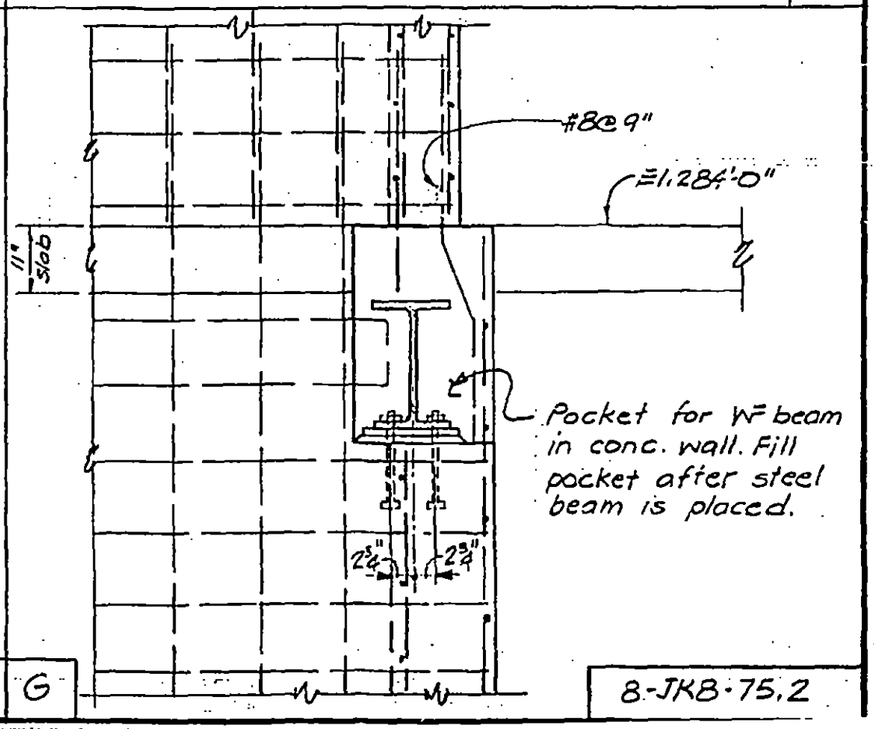

G

8-JKB-75.2

LICENSED PROFESSIONAL ENGINEER
LESLIE E. ROBERTSON
No. 34360
UNIVERSITY OF THE STATE OF NEW YORK

DESIGNED D.S.
DRAWN T.R.
REVIEWED

SKILLING, HELLE, CHRISTIANSEN, ROBERTSON — Structural & Civil Engineers

PROJECT: THE WORLD TRADE CENTER | TITLE: SECTIONS AT AUTO LIFT - EL. 284'-0" | DATE: 1-12-73

REVISIONS

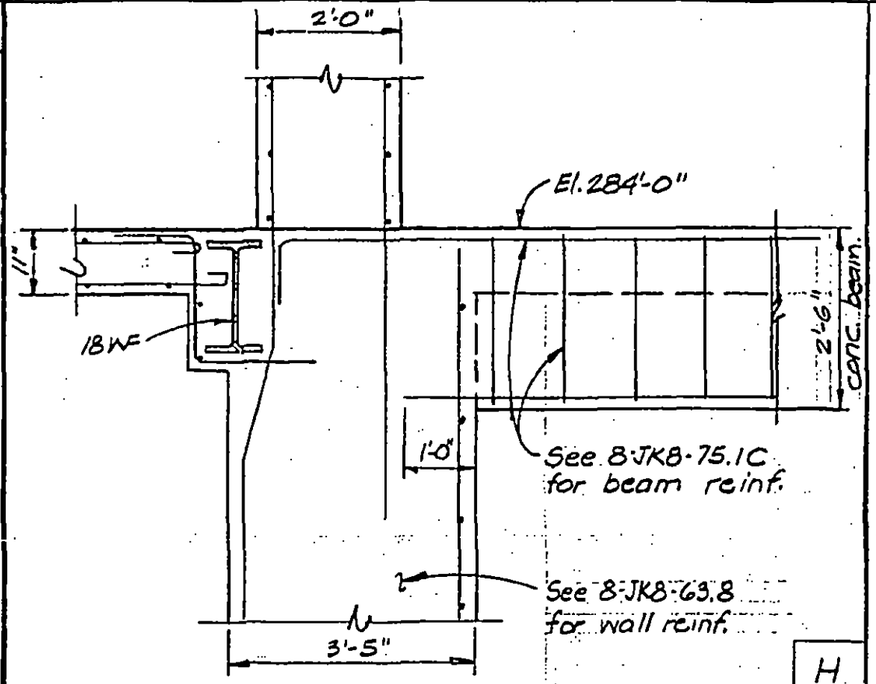

H

LICENSED PROFESSIONAL ENGINEER — LESLIE E. ROBERTSON — No. 34360 — UNIVERSITY OF THE STATE OF NEW YORK

DESIGNED D. S.

DRAWN

REVIEWED

8-JK8-753

SKILLING, HELLE, CHRISTIANSEN, ROBERTSON — Structural & Civil Engineers

PROJECT: THE WORLD TRADE CENTER | TITLE: SLAB SECTIONS AT ESCALATOR - EL 294'-0" | DATE: 3-15-73

REVISIONS

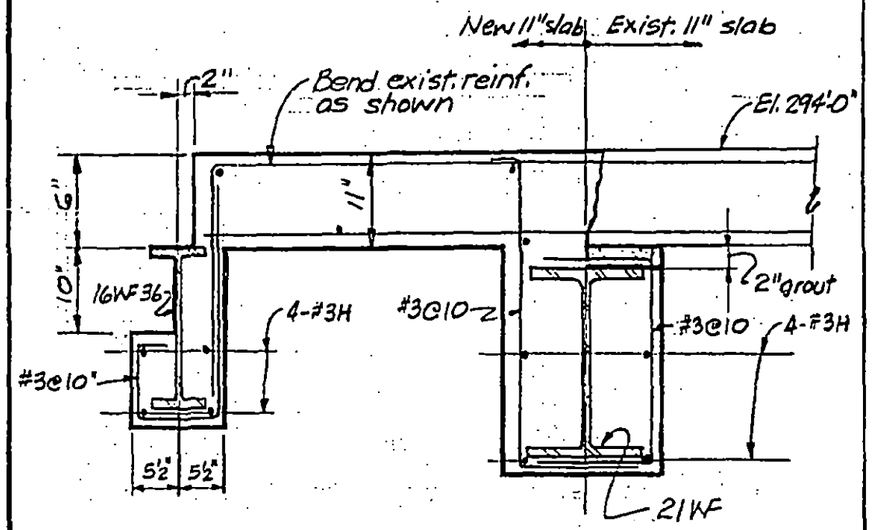

A

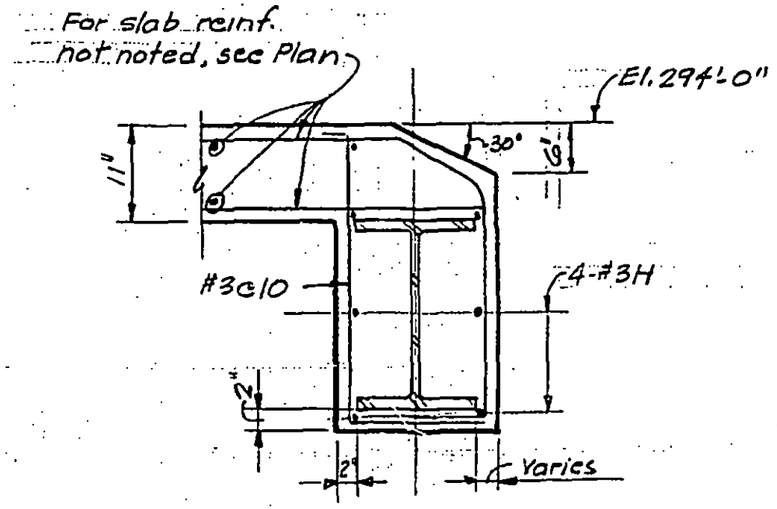

B

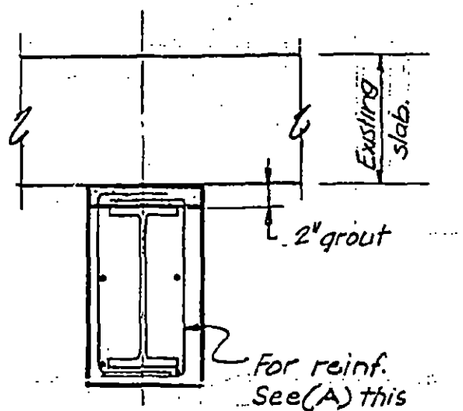

C

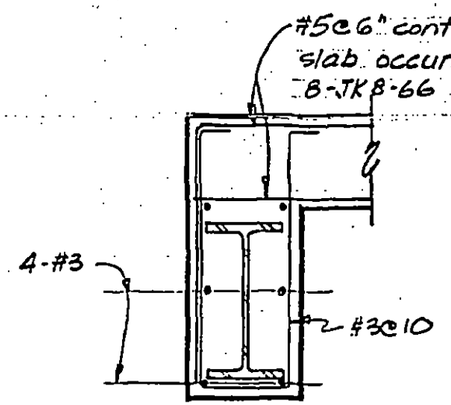

D

Note: Grout (dry pack) between existing slab and steel beam. Grout to be f'c = 5000 psi

LICENSED PROFESSIONAL ENGINEER — LESLIE E. ROBERTSON — No. 34360 — UNIVERSITY OF THE STATE OF NEW YORK

DESIGNED K.C.
DRAWN
REVIEWED

8-JK8-80

SKILLING, HELLE, CHRISTIANSEN, ROBERTSON — Structural & Civil Engineers

PROJECT: THE WORLD TRADE CENTER | TITLE: SECTION AT STAIR K-8 EL 310 | DATE: 6-15-73

REVISIONS

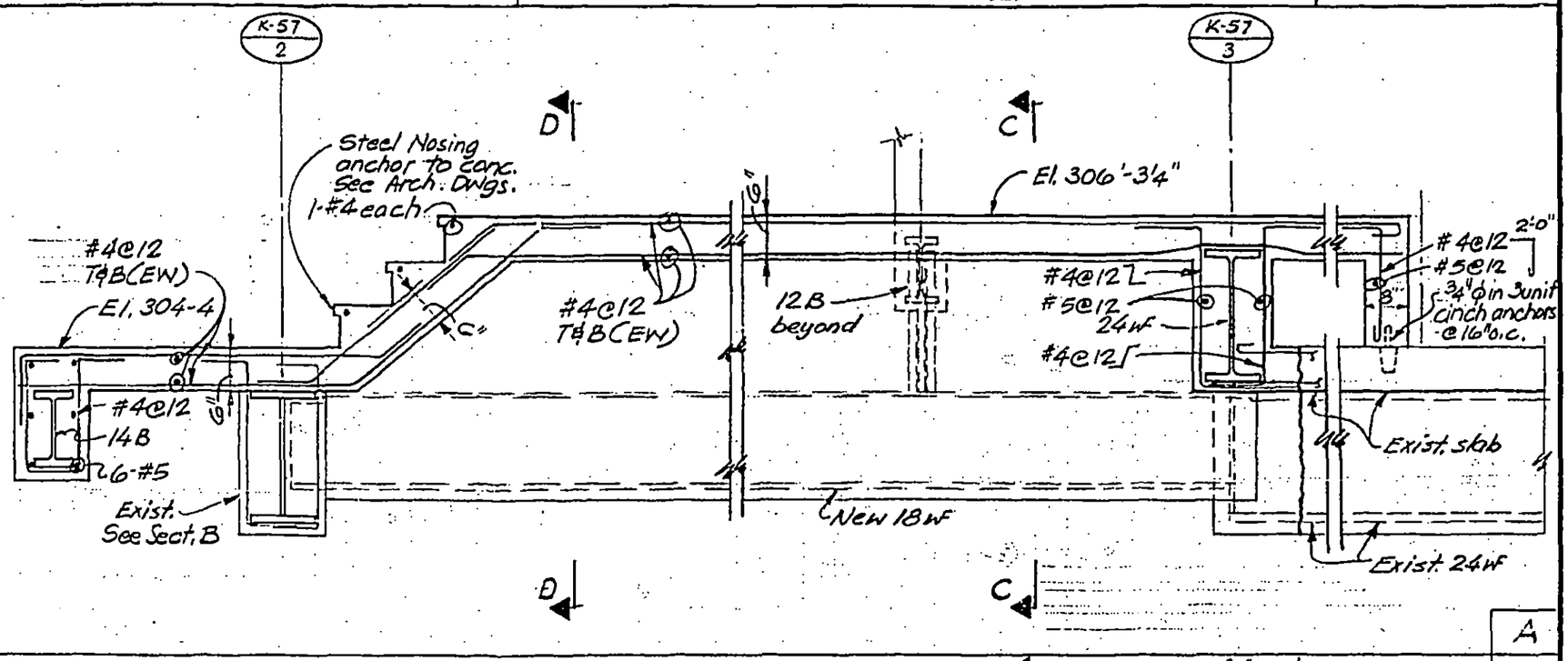

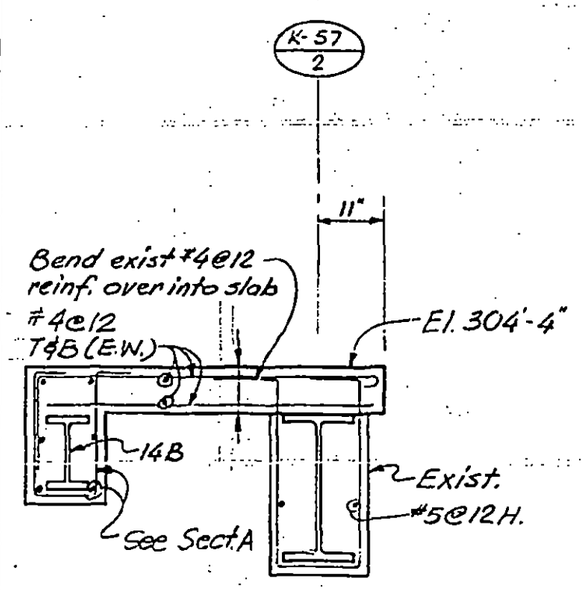

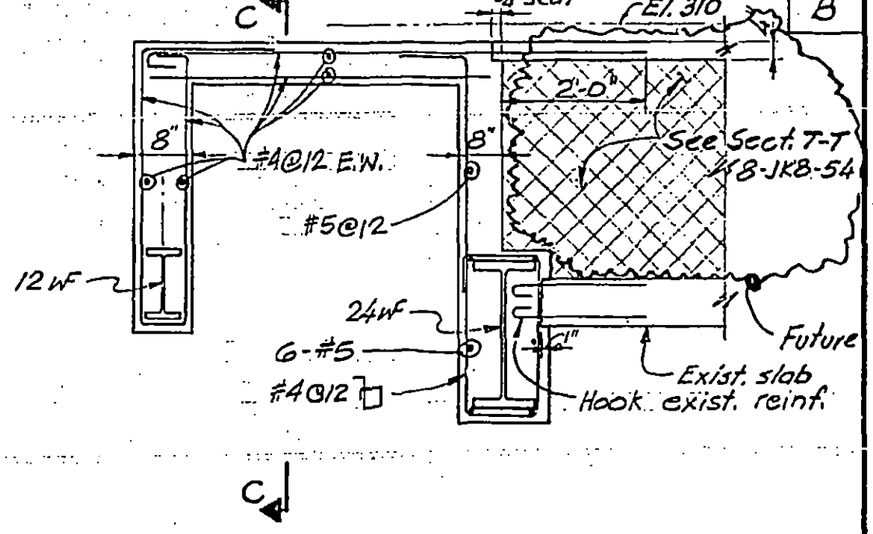

A
B

LICENSED PROFESSIONAL ENGINEER — LESLIE E. ROBERTSON — No. 34360 — UNIVERSITY OF THE STATE OF NEW YORK

DESIGNED

DRAWN JG

REVIEWED WAB

8-JK8-81.1

SKILLING, HELLE, CHRISTIANSEN, ROBERTSON — Structural & Civil Engineers

PROJECT: THE WORLD TRADE CENTER

TITLE: SECTION AT STAIR K-8 EL -310

DATE: 6-15-73

REVISIONS

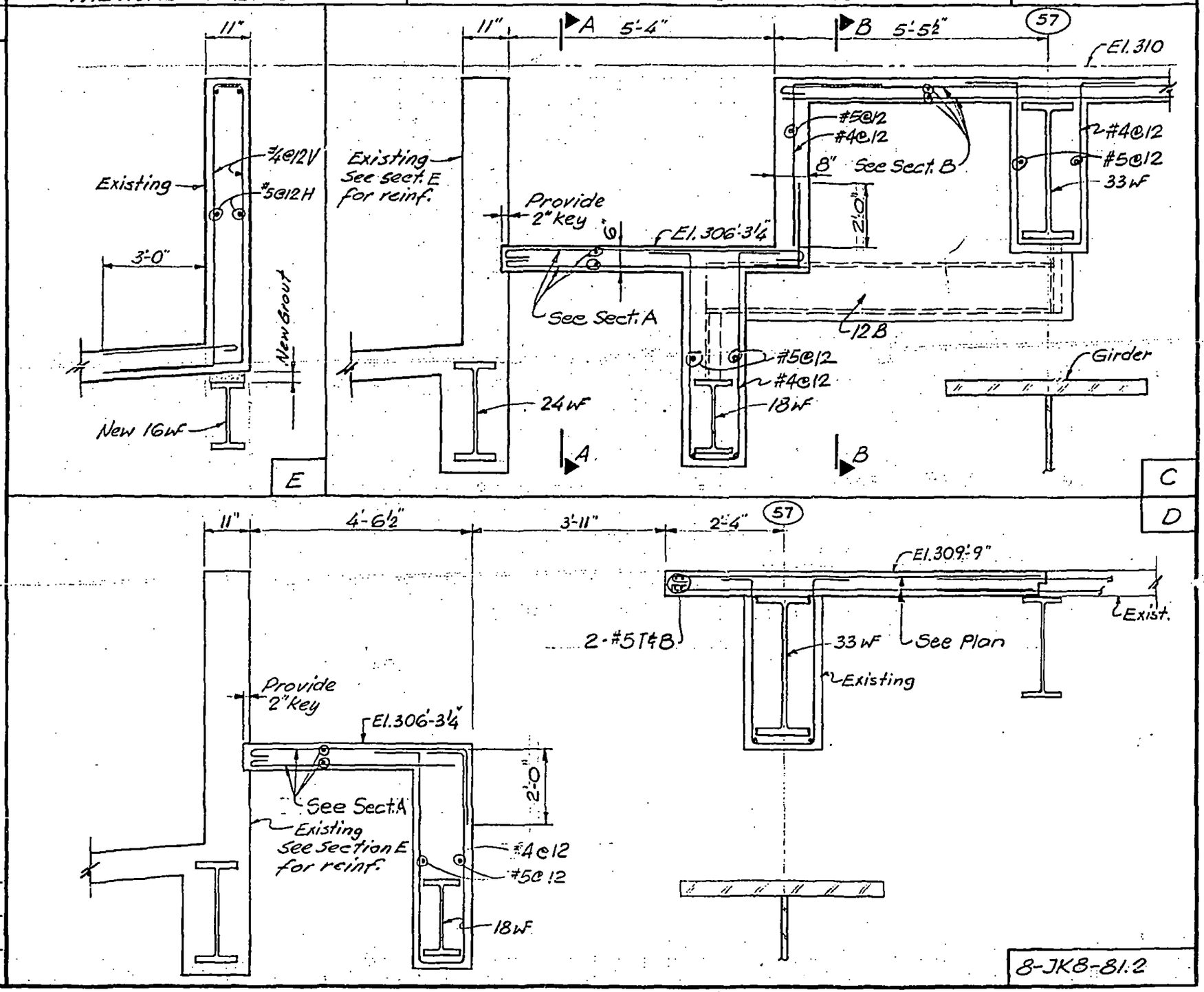

LICENSED PROFESSIONAL ENGINEER — LESLIE E. ROBERTSON — No. 34360 — UNIVERSITY OF THE STATE OF NEW YORK

DESIGNED

DRAWN: J.G.

REVIEWED: L.E.R.

8-JK8-81.2

SKILLING, HELLE, CHRISTIANSEN, ROBERTSON — Structural & Civil Engineers

PROJECT THE WORLD TRADE CENTER | TITLE SECTION AT ESCALATOR El. 310 | DATE 6-15-73

REVISIONS

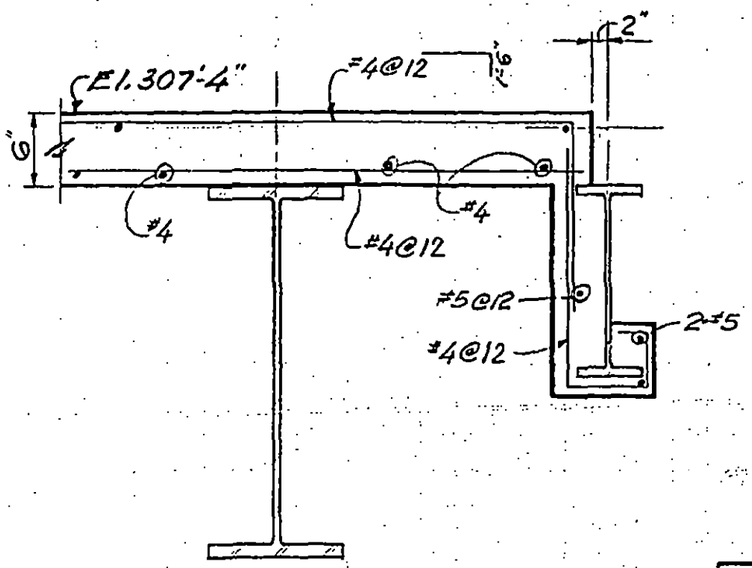

A

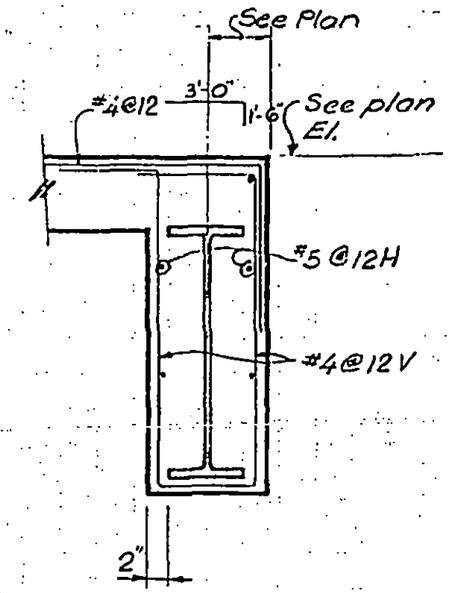

B

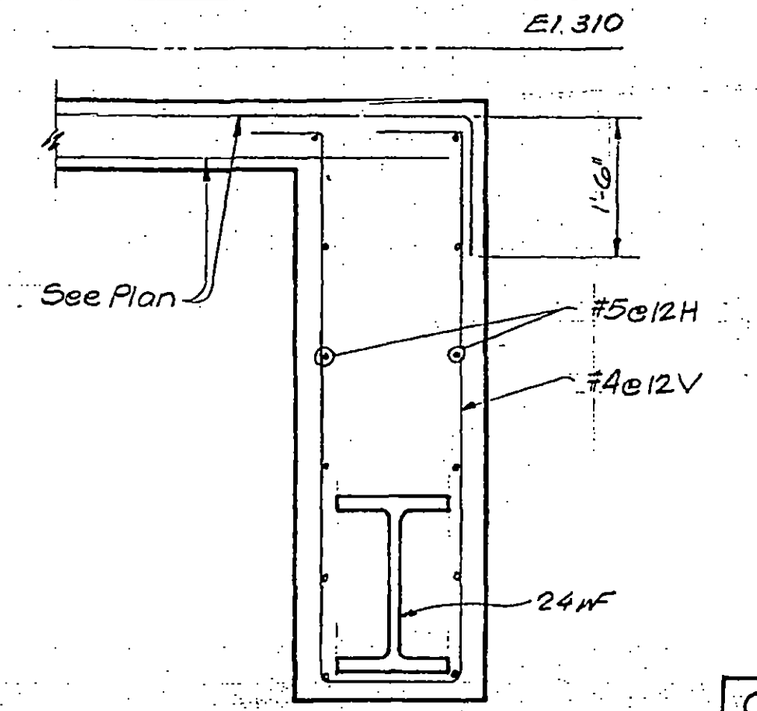

C

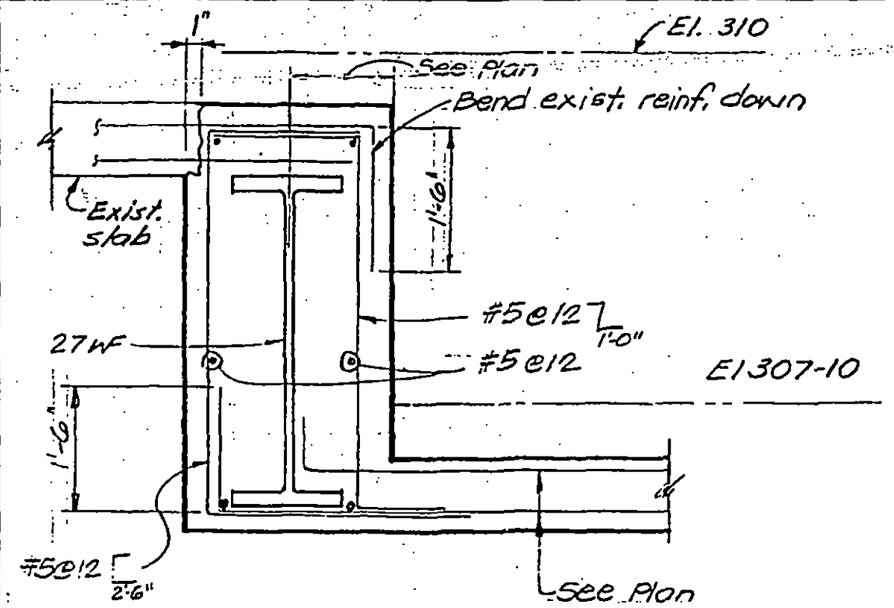

D

LICENSED PROFESSIONAL ENGINEER — LESLIE E. ROBERTSON — NO. 34360 — UNIVERSITY OF THE STATE OF NEW YORK

DESIGNED KC

DRAWN J. Gricius

REVIEWED LER

8-JK8-82.1

SKILLING, HELLE, CHRISTIANSEN, ROBERTSON — Structural & Civil Engineers

PROJECT THE WORLD TRADE CENTER | TITLE SECTION AT SERVICE ELEVATORS | DATE 6-15-73

REVISIONS

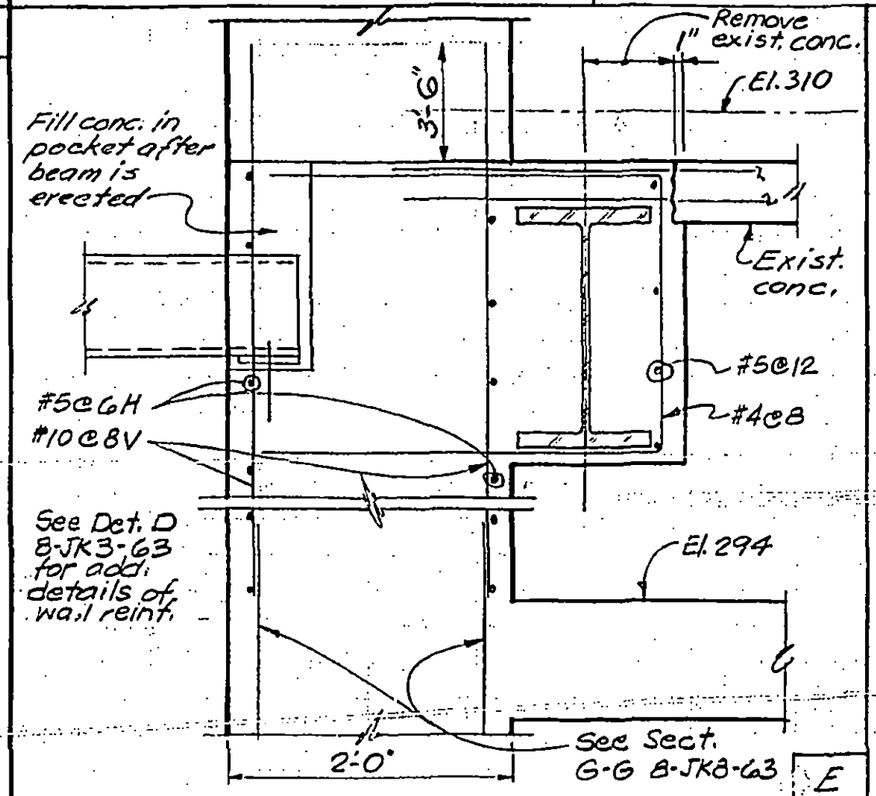

E

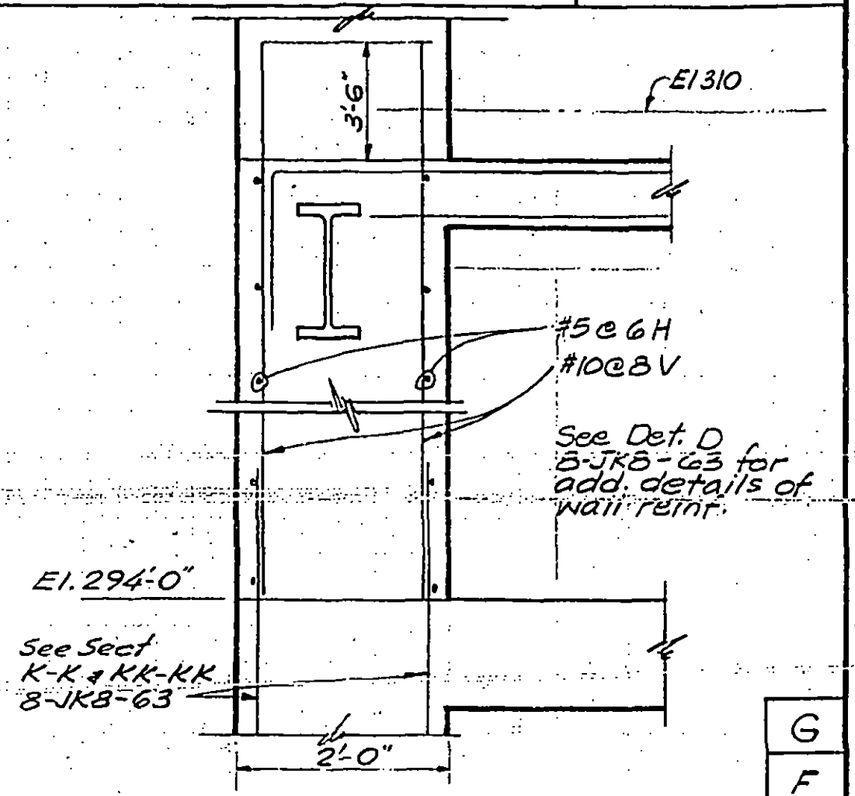

G

F

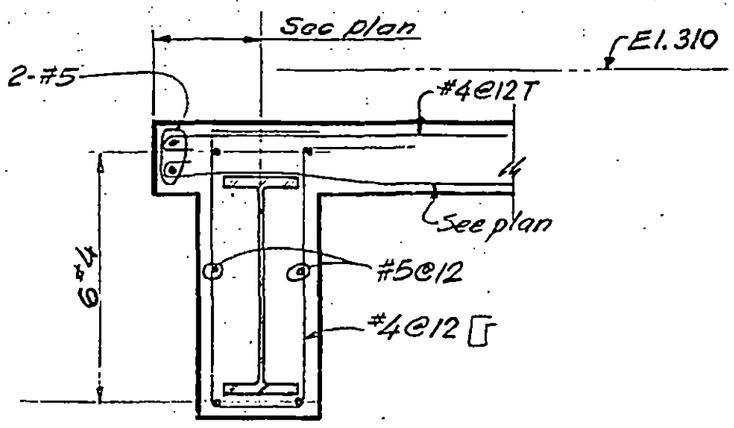

H

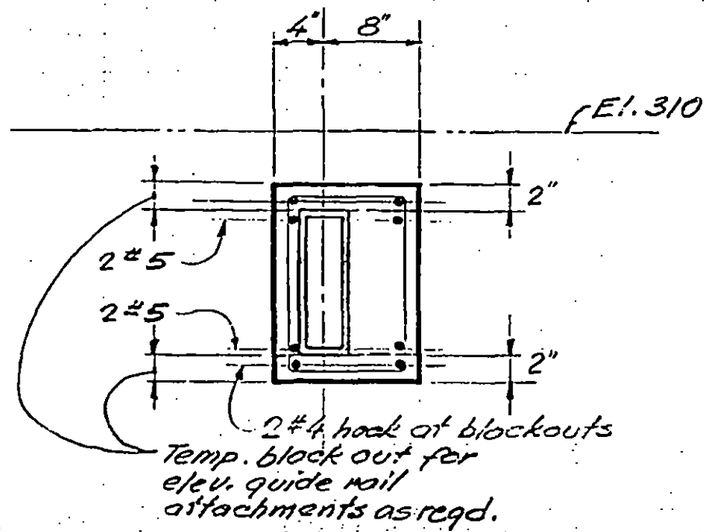

J

8-JK8-82.2

LICENSED PROFESSIONAL ENGINEER — LESLIE E. ROBERTSON — No. 34360 — UNIVERSITY OF THE STATE OF NEW YORK

DESIGNED K. C.

DRAWN J. Gricius

REVIEWED Wab

SKILLING, HELLE, CHRISTIANSEN, ROBERTSON — Structural & Civil Engineers

PROJECT: THE WORLD TRADE CENTER | TITLE: SECTION AT ESCALATOR PIT El. 310 | DATE: 6-15-73

REVISIONS

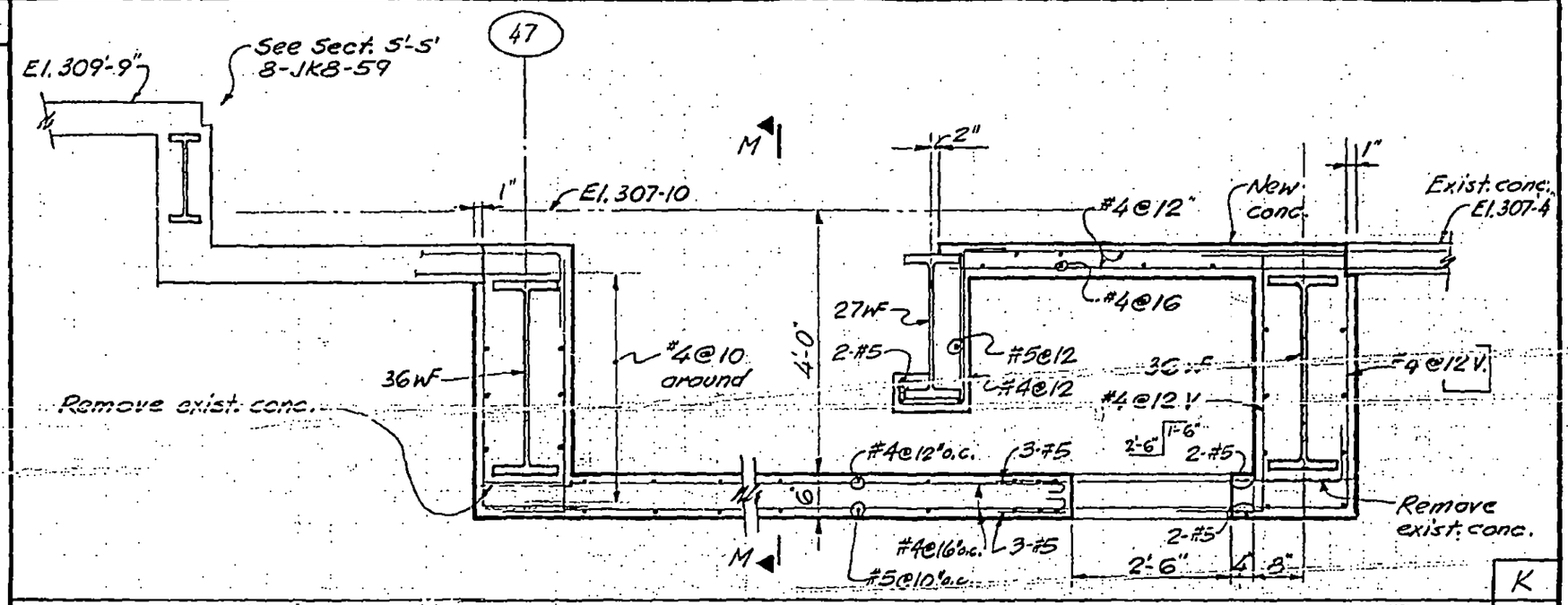

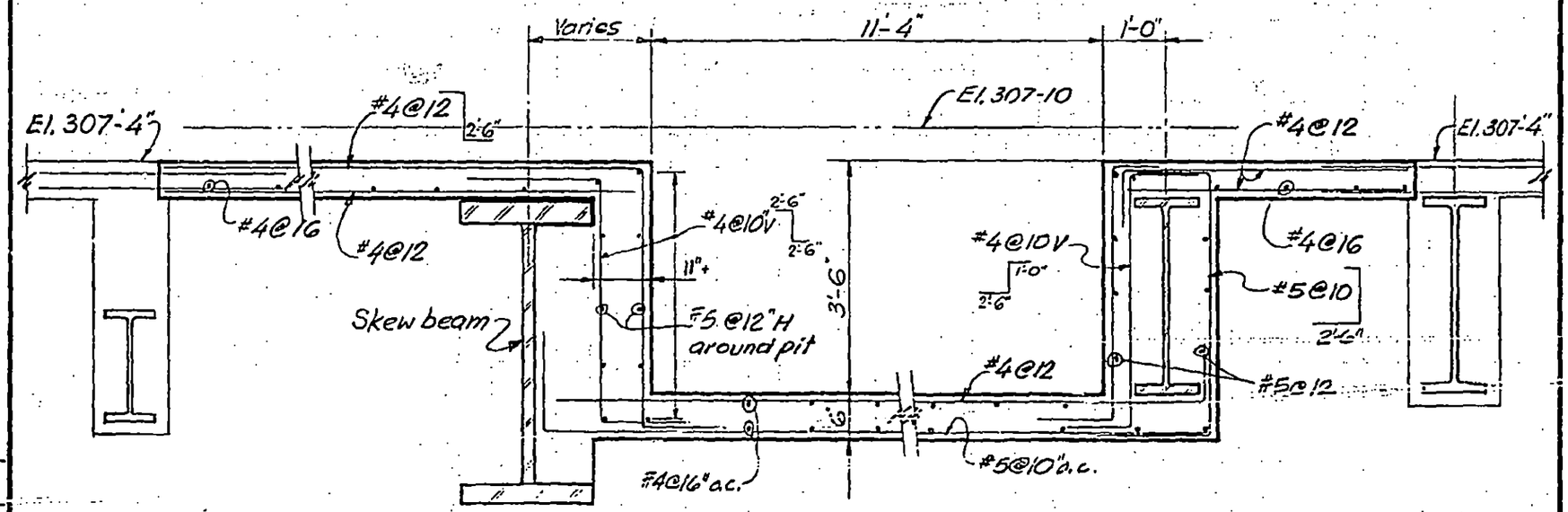

LICENSED PROFESSIONAL ENGINEER — LESLIE E. ROBERTSON — No. 34360 — UNIVERSITY OF THE STATE OF NEW YORK

DESIGNED K.C. P.Y.

DRAWN J. Gricius

REVIEWED Wap

8-JK8-82.3

SKILLING, HELLE, CHRISTIANSEN, ROBERTSON — Structural & Civil Engineers

PROJECT: THE WORLD TRADE CENTER | TITLE: SECTIONS AT SERVICE ELEVATORS | DATE: 10-11-73

REVISIONS

4-5-74

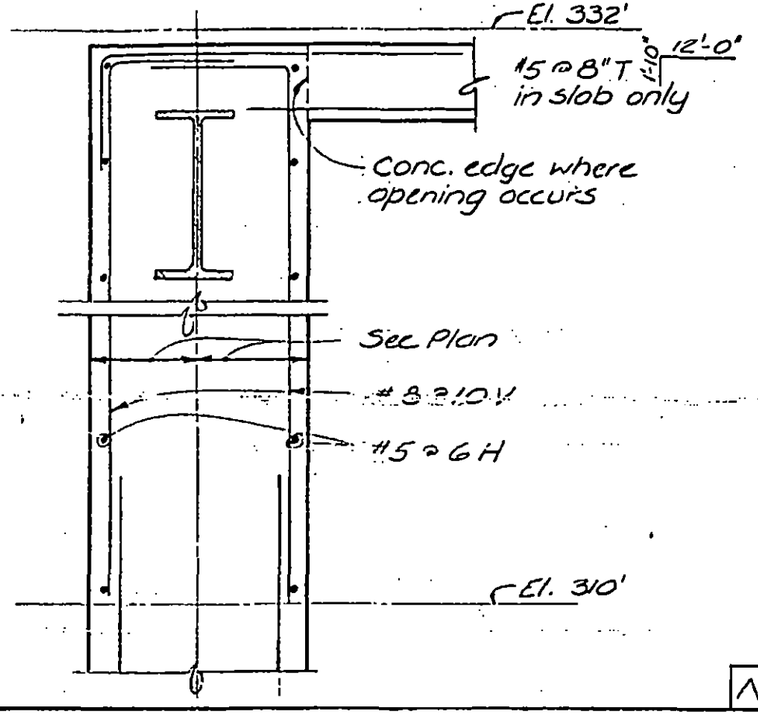

N P

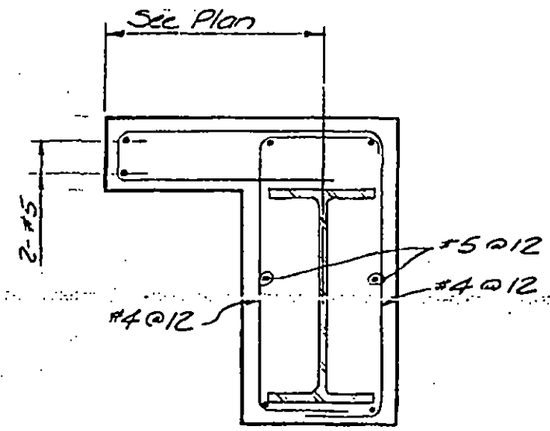

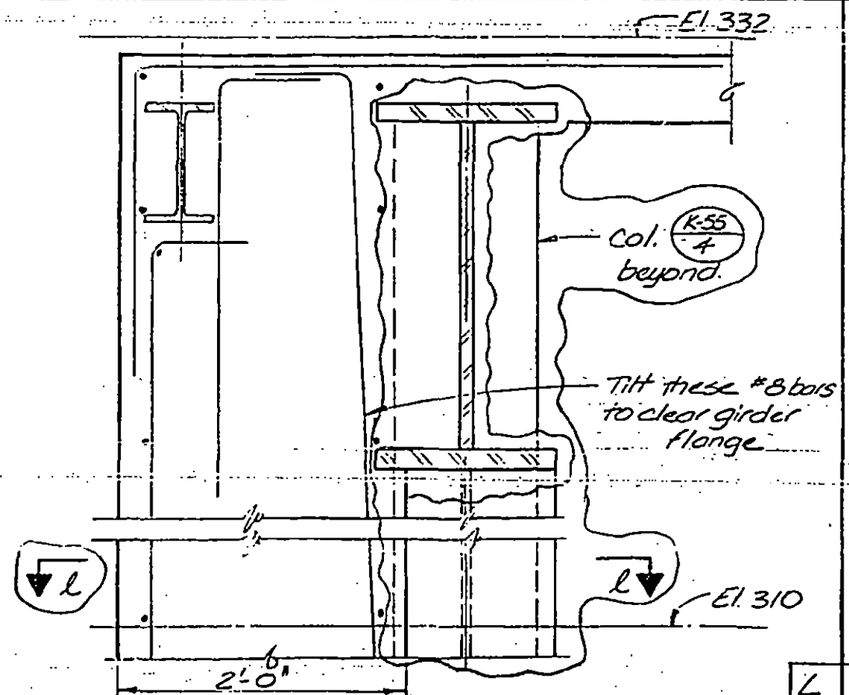

L l

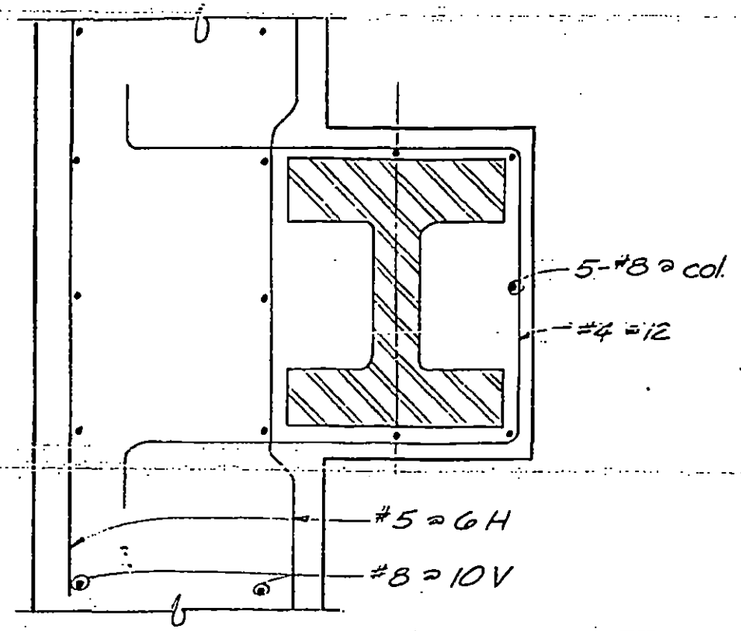

8-JKB-82.4

LICENSED PROFESSIONAL ENGINEER — LESLIE E. ROBERTSON — No. 34360 — UNIVERSITY OF THE STATE OF NEW YORK

DESIGNED K.C.

DRAWN J.B.

REVIEWED J.T.M.

SKILLING, HELLE, CHRISTIANSEN, ROBERTSON — Structural & Civil Engineers

PROJECT: THE WORLD TRADE CENTER | TITLE: SECTIONS AT SERVICE ELEVATORS | DATE: 4-5-74

REVISIONS

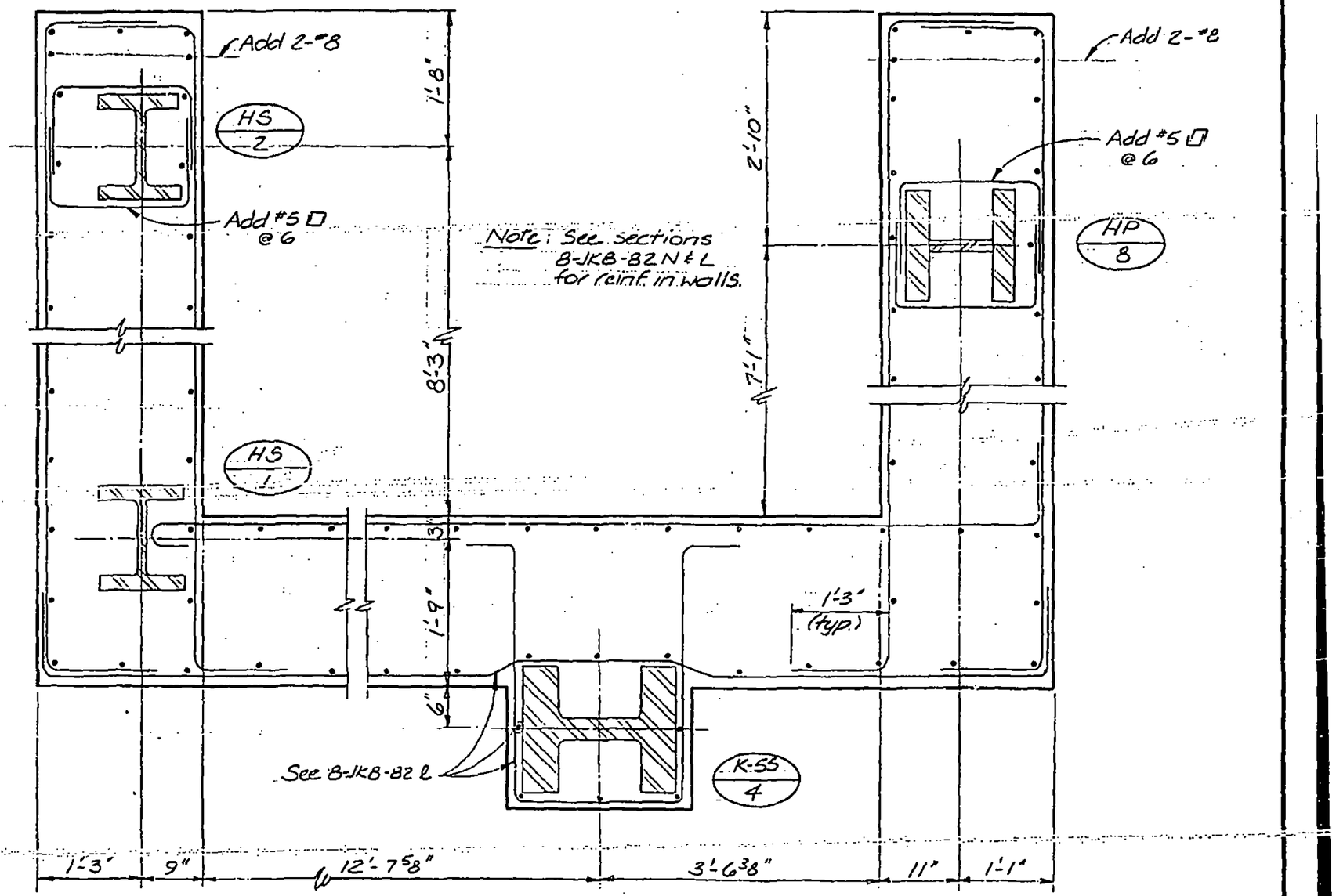

Note: See sections 8-JK8-82 N & L for reinf. in walls.

Placement of Wall Reinf. at El. 310

LICENSED PROFESSIONAL ENGINEER — LESLIE E. ROBERTSON — No. 34360 — UNIVERSITY OF THE STATE OF NEW YORK

DESIGNED J.T.M.
DRAWN J.B.
REVIEWED WRB

Q

8-JK8-82.5

SKILLING, HELLE, CHRISTIANSEN, ROBERTSON — Structural & Civil Engineers

PROJECT: THE WORLD TRADE CENTER | TITLE: SECTION AT NEW OPENING El. 310 | DATE: 6-15-73

REVISIONS

Notes:

1. Slabs and other construction shall be shored as required before removing existing concrete.
2. Remove existing concrete without damage to existing reinforcing.
3. Clean face of existing concrete and thoroughly coat entire surface with "Approved" epoxy bonding compound.
4. Cast new concrete using approved "non-shrink" f'c = 4000 psi concrete, stone or lightweight aggregate to match existing.

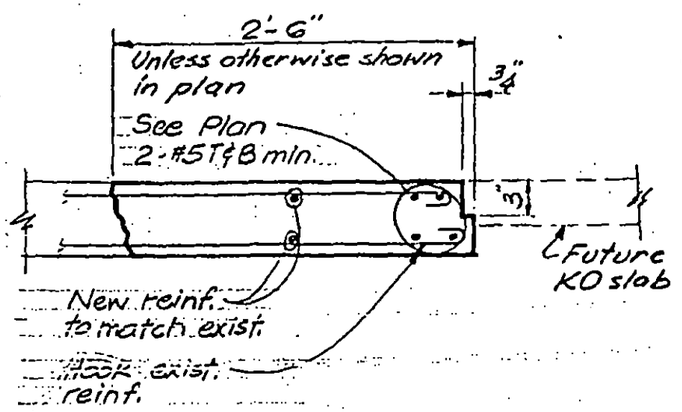

A

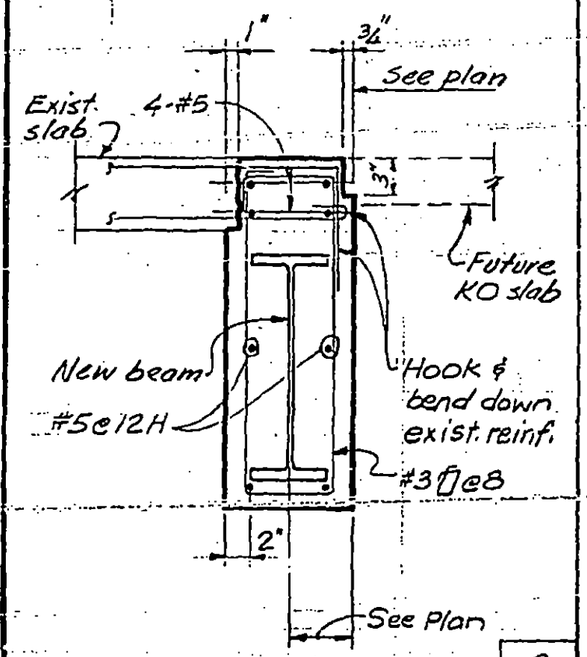

B

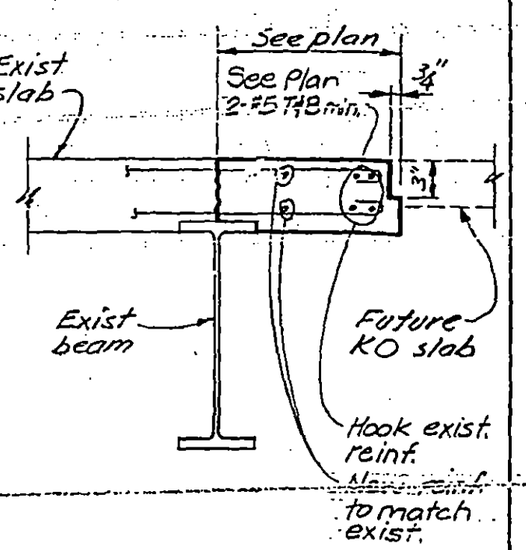

C

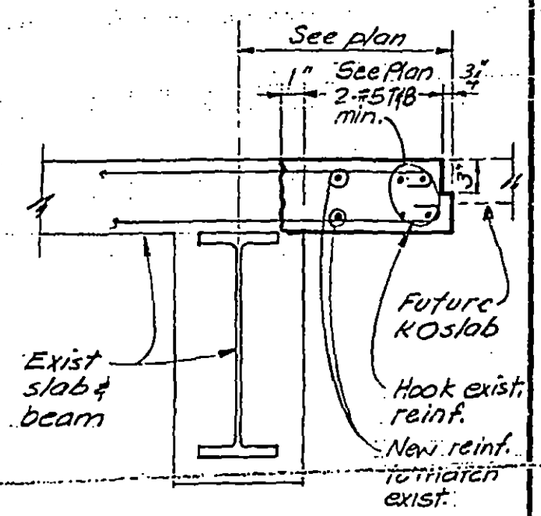

D

LICENSED PROFESSIONAL ENGINEER — LESLIE E. ROBERTSON — No. 34360 — UNIVERSITY OF THE STATE OF NEW YORK

DESIGNED

DRAWN J. G.

REVIEWED Wolf

8-JK8-83.1

SKILLING, HELLE, CHRISTIANSEN, ROBERTSON — Structural & Civil Engineers

PROJECT THE WORLD TRADE CENTER | TITLE SECTIONS AT NEW OPNGS EL. 310 | DATE 6-15-73

REVISIONS

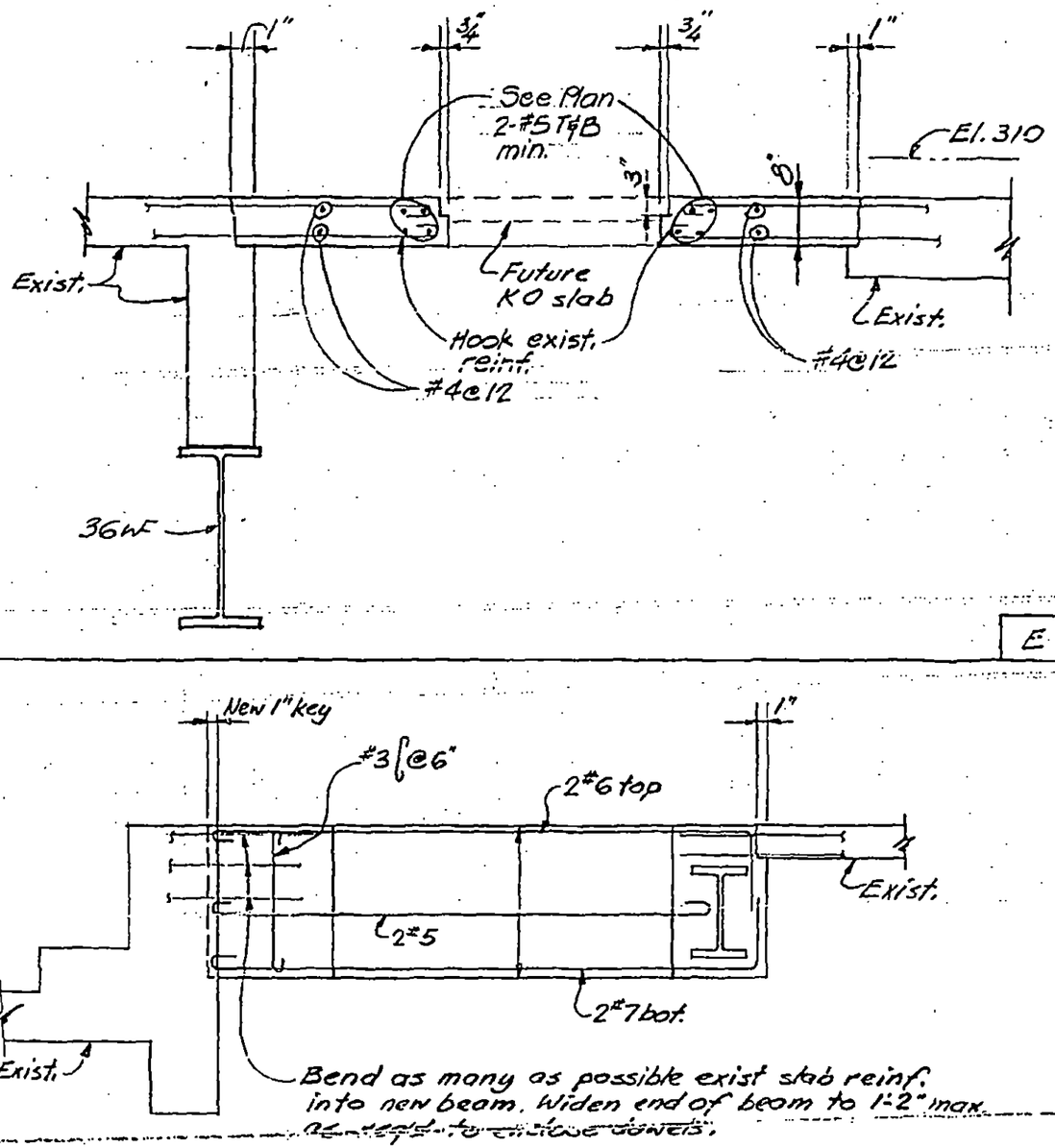

E

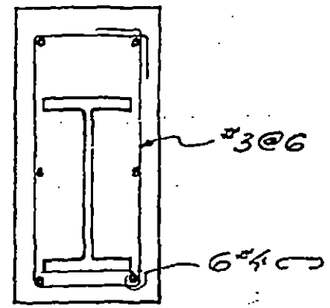

F

G

LICENSED PROFESSIONAL ENGINEER
LESLIE E. ROBERTSON
No. 34380
UNIVERSITY OF THE STATE OF NEW YORK

DESIGNED

DRAWN J.G.

REVIEWED WOB

8-JK8-83.2

SKILLING, HELLE, CHRISTIANSEN, ROBERTSON — Structural & Civil Engineers

PROJECT: THE WORLD TRADE CENTER | TITLE: MECH. PLATFORM ZONE K5 EL.303-6 PLAN | DATE: 6-15-73

REVISIONS

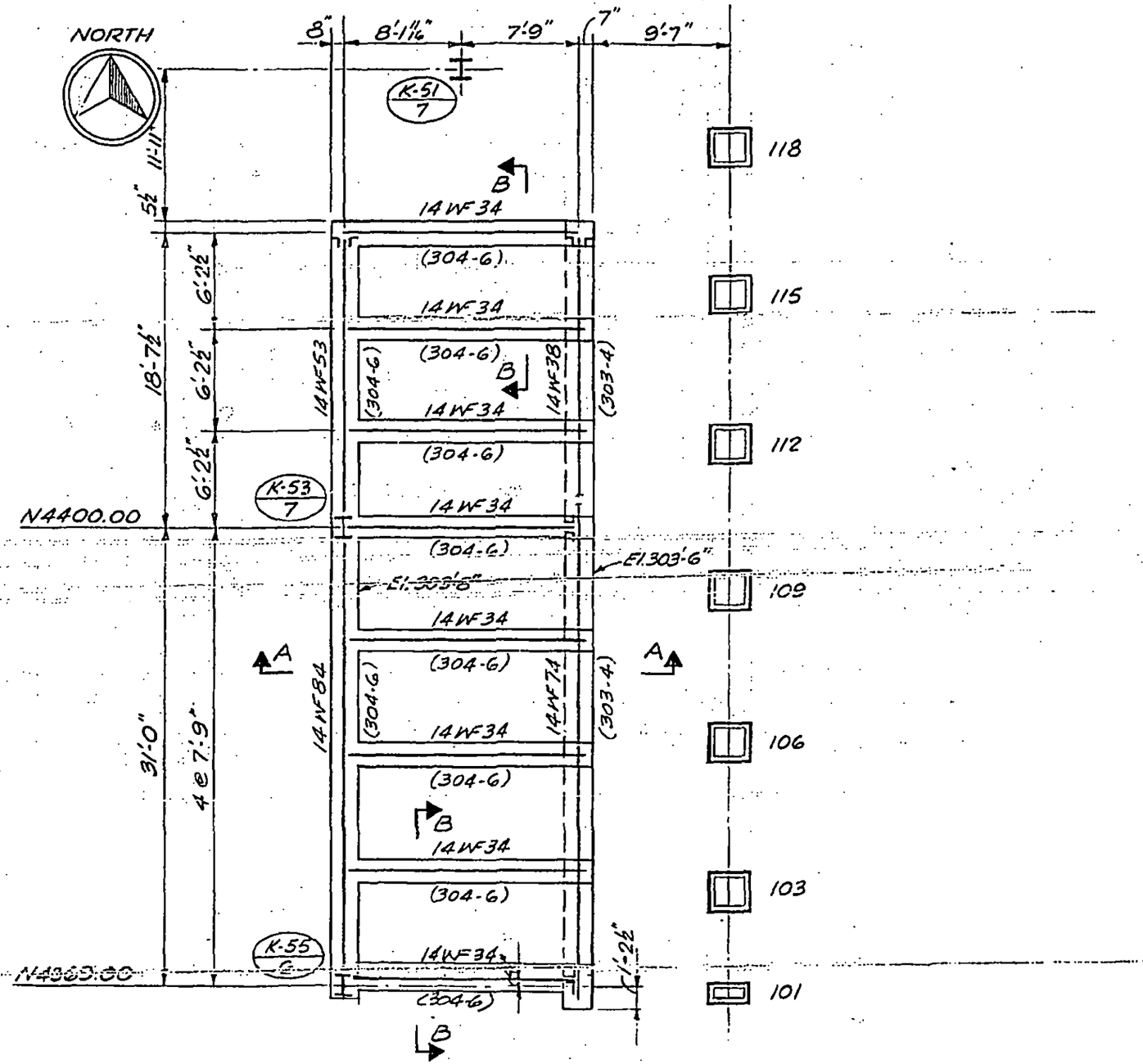

Mechanical Platform

Reference floor at El. 303'-6"

LICENSED PROFESSIONAL ENGINEER — LESLIE E. ROBERTSON — UNIVERSITY OF THE STATE OF NEW YORK

DESIGNED

DRAWN: SC

REVIEWED

8-JK8-84.1

SKILLING, HELLE, CHRISTIANSEN, ROBERTSON — Structural & Civil Engineers

PROJECT: THE WORLD TRADE CENTER | TITLE: MECH. PLATFORM ZONE K5 EL.303-6 SECTIONS | DATE: 6-15-73

REVISIONS

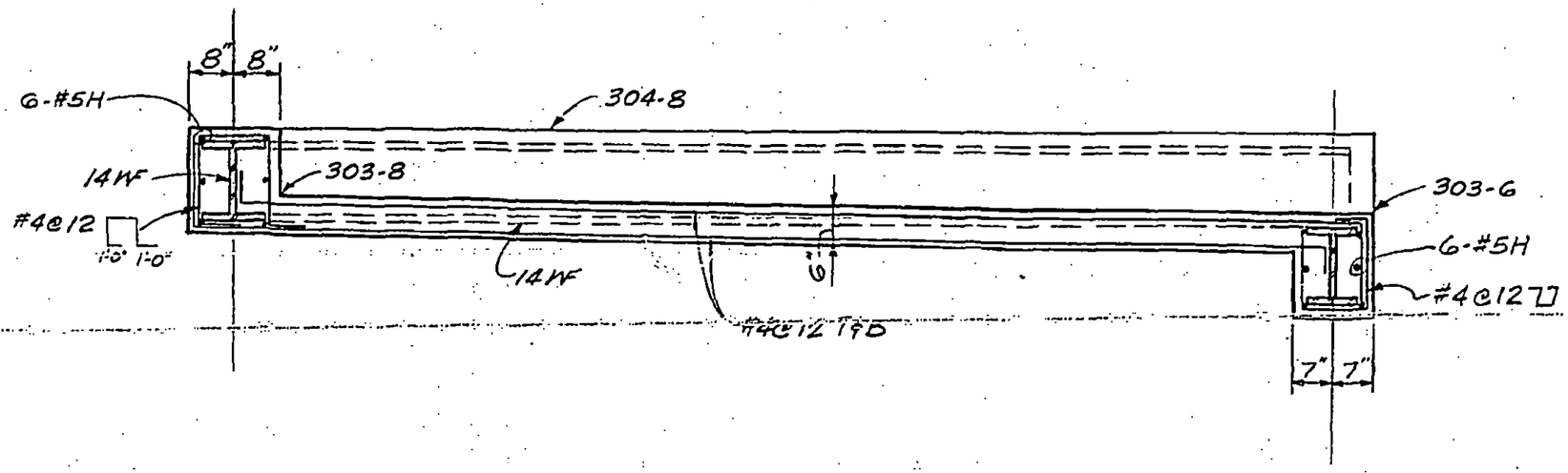

A

B

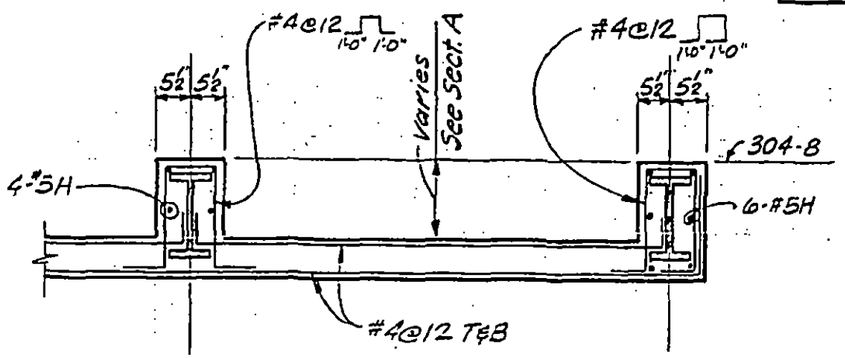

LICENSED PROFESSIONAL ENGINEER
LESLIE E. ROBERTSON
NO. 34360
UNIVERSITY OF THE STATE OF NEW YORK

DESIGNED

DRAWN
SC

REVIEWED

8-JK8-84.2

SKILLING, HELLE, CHRISTIANSEN, ROBERTSON — Structural & Civil Engineers

PROJECT: THE WORLD TRADE CENTER

TITLE: MECH. PLATFORM ZONE K5 EL. 320 PLAN

DATE: 6-15-73

REVISIONS

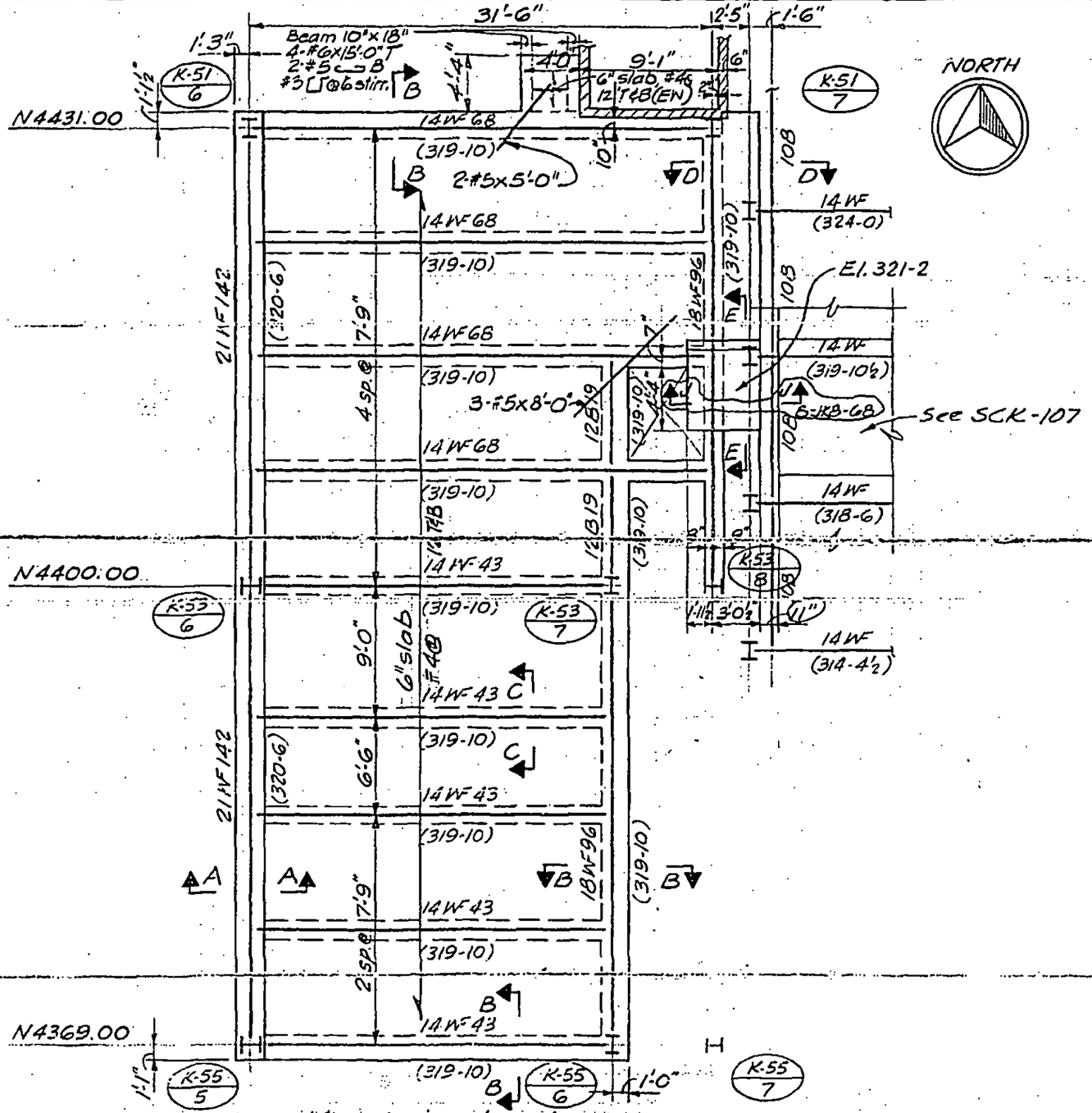

Mezzanine Level

Reference floor at El. 320'-0"

8-JK8-85.1

LICENSED PROFESSIONAL ENGINEER — LESLIE E. ROBERTSON — No. 34360 — UNIVERSITY OF THE STATE OF NEW YORK

DESIGNED

DRAWN SC

REVIEWED WEP

SKILLING, HELLE, CHRISTIANSEN, ROBERTSON — Structural & Civil Engineers

PROJECT THE WORLD TRADE CENTER | TITLE MECH. PLATFORM ZONE K5 EL.320 SECTIONS | DATE 6-15-73

REVISIONS

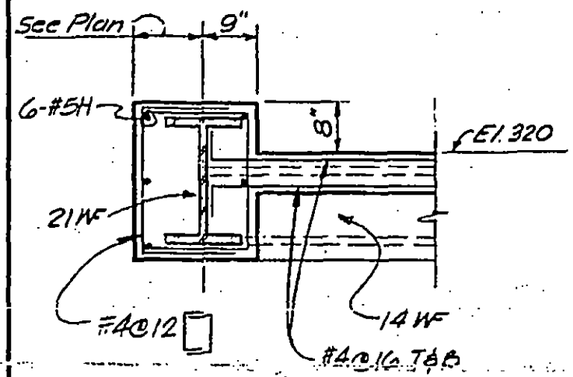

A

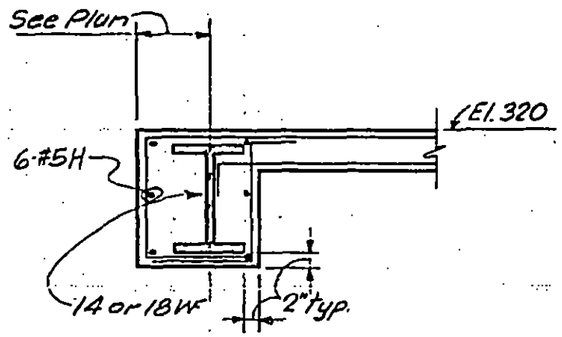

B

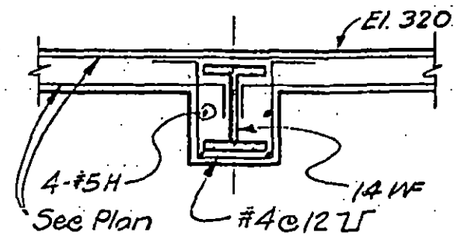

C

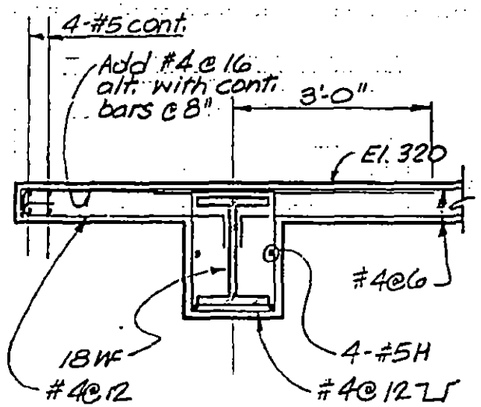

D

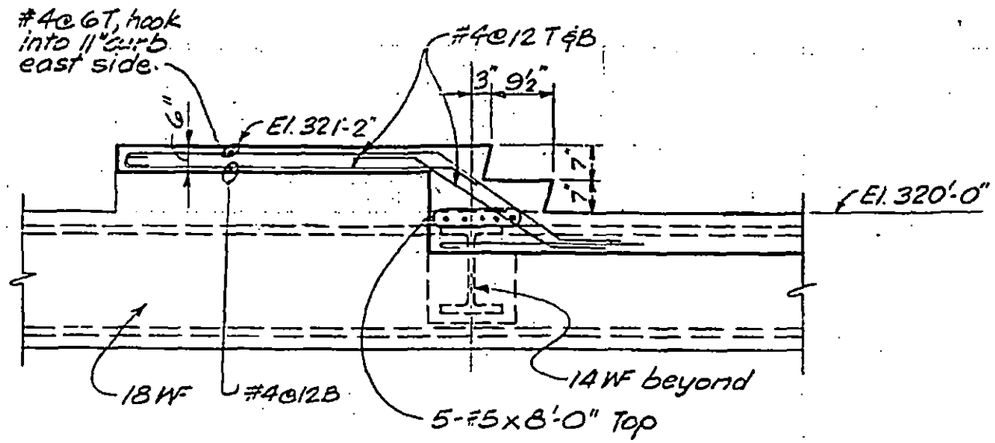

E

LICENSED PROFESSIONAL ENGINEER LESLIE E. ROBERTSON No 34360 UNIVERSITY OF THE STATE OF NEW YORK

DESIGNED

DRAWN SC

REVIEWED

8-JK8-85.2

SKILLING, HELLE, CHRISTIANSEN, ROBERTSON — Structural & Civil Engineers

PROJECT: THE WORLD TRADE CENTER

TITLE: SECTION MECH. PLATFORM OVER RAMP M

DATE: 6-15-73

REVISIONS

A

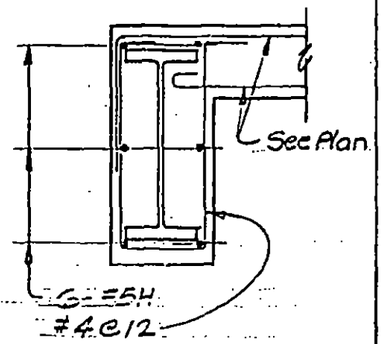

B

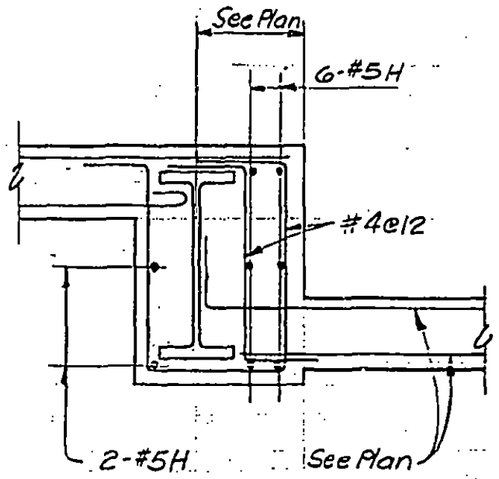

C

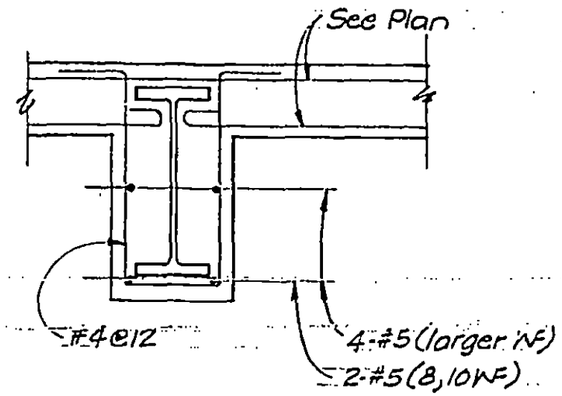

D

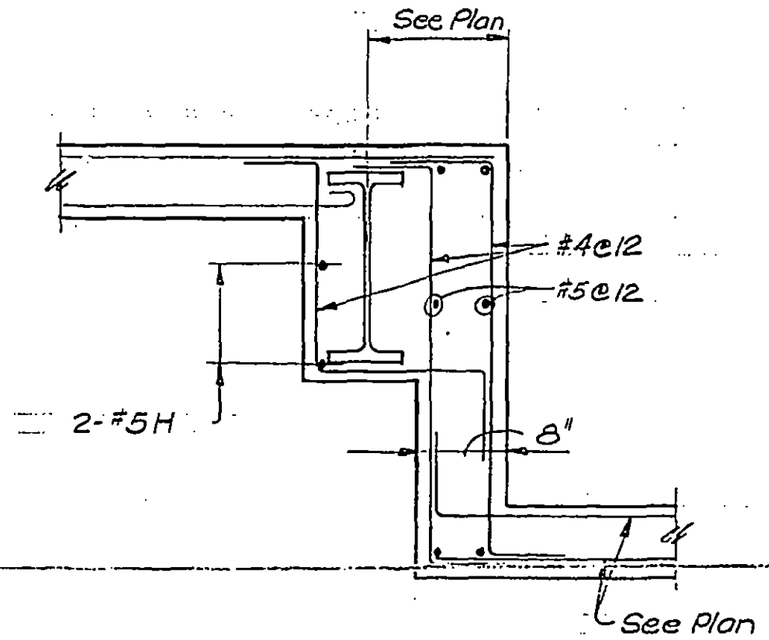

E

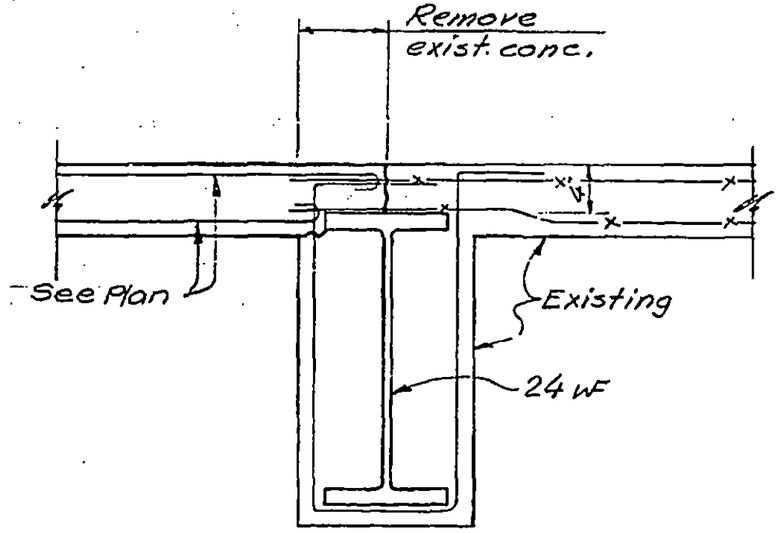

LICENSED PROFESSIONAL ENGINEER — LESLIE E. ROBERTSON — No. 34360 — UNIVERSITY OF THE STATE OF NEW YORK

DESIGNED

DRAWN J.G.

REVIEWED LEB

8-JK8-86

SKILLING, HELLE, CHRISTIANSEN, ROBERTSON — Structural & Civil Engineers

PROJECT THE WORLD TRADE CENTER | TITLE SECTION El. 310 | DATE 6-15-73

REVISIONS

A

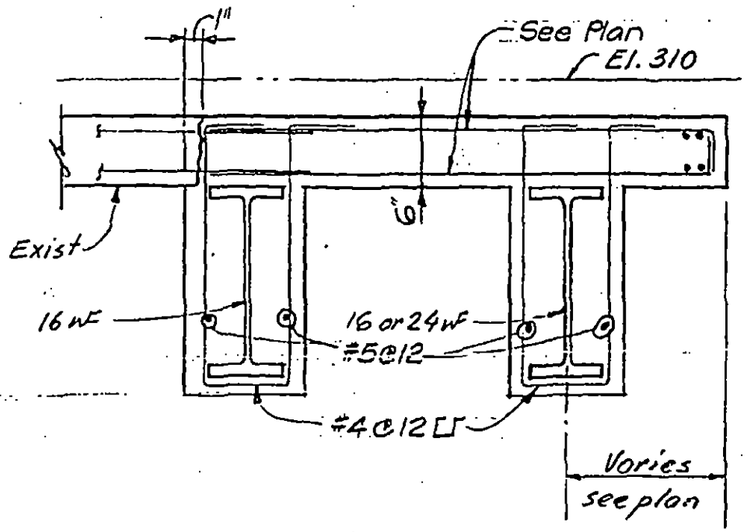

B

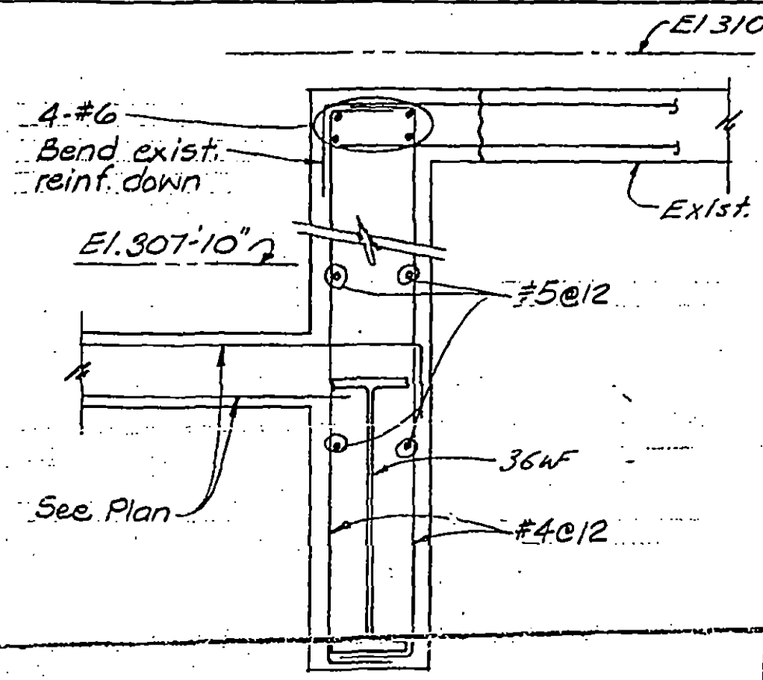

C

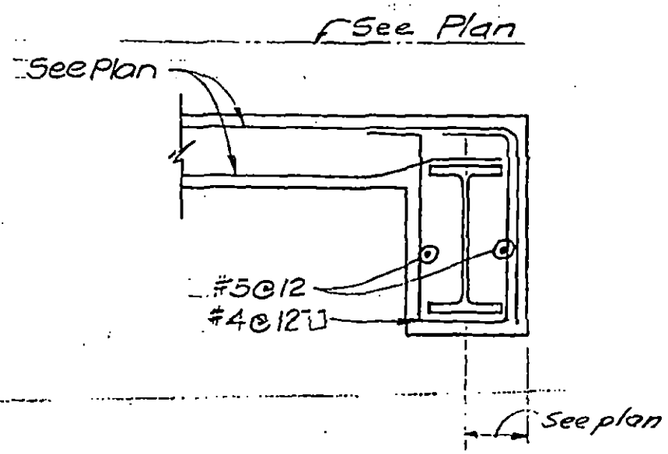

D

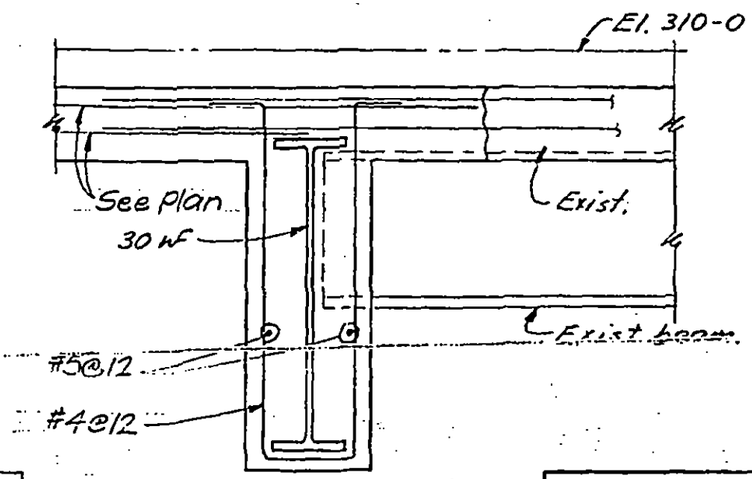

8-JK8-87

LICENSED PROFESSIONAL ENGINEER — LESLIE E. ROBERTSON — No. 34360 — UNIVERSITY OF THE STATE OF NEW YORK

DESIGNED

DRAWN J.G.

REVIEWED WAB

BOOK 8

CHAPTERS

10 & 11

[illegible] ROBERTSON Structural & Civil Engineers

THE WORLD TRADE CENTER | TITLE DETAIL AT COLUMN-FLOOR 107 | DATE 11-23-70

...IONS
6-16-72
7-27-73 (As built)
9-12-73
7-12-74

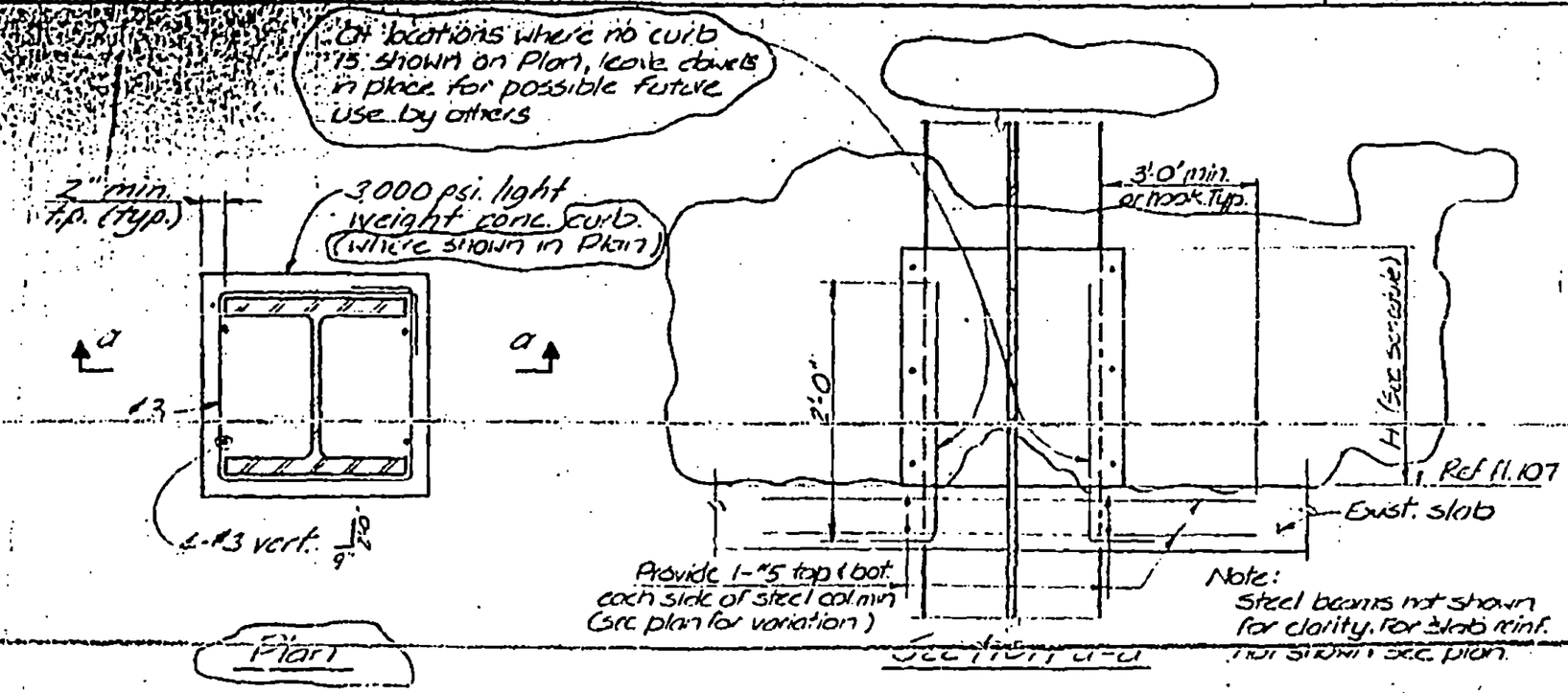

Detail No.	Dimension "H"
8-AB10-1.1A	0" (No curb)
8-AB10-1.1B	1'-7½"
8-AB10-1.1C	1'-10"
8-AB10-1.1D	1'-8"

LICENSED PROFESSIONAL ENGINEER LESLIE E. ROBERTSON No. 34360 UNIVERSITY OF THE STATE OF NEW YORK

DESIGNER K. Chiang

DRAWN J. Adams

REVIEWED WOB

8-AB10-1.1

SKILLING, HELLE, CHRISTIANSEN, ROBERTSON — Structural & Civil Engineers

PROJECT: THE WORLD TRADE CENTER | TITLE: DETAIL AT COLUMN AND DIAGONAL FL. 107 | DATE: 11-23-70

REVISIONS

6-16-72
7-27-73 (As built)
9-12-73
7-12-74

Detail No.	Dimension H
8-AB10-1.2A	0 (Above)
8-AB10-1.2B	1'-7½"
8-AB10-1.2C	1'-10"
8-AB10-1.2D	3'-7½"
8-AB10-1.2E	1-8

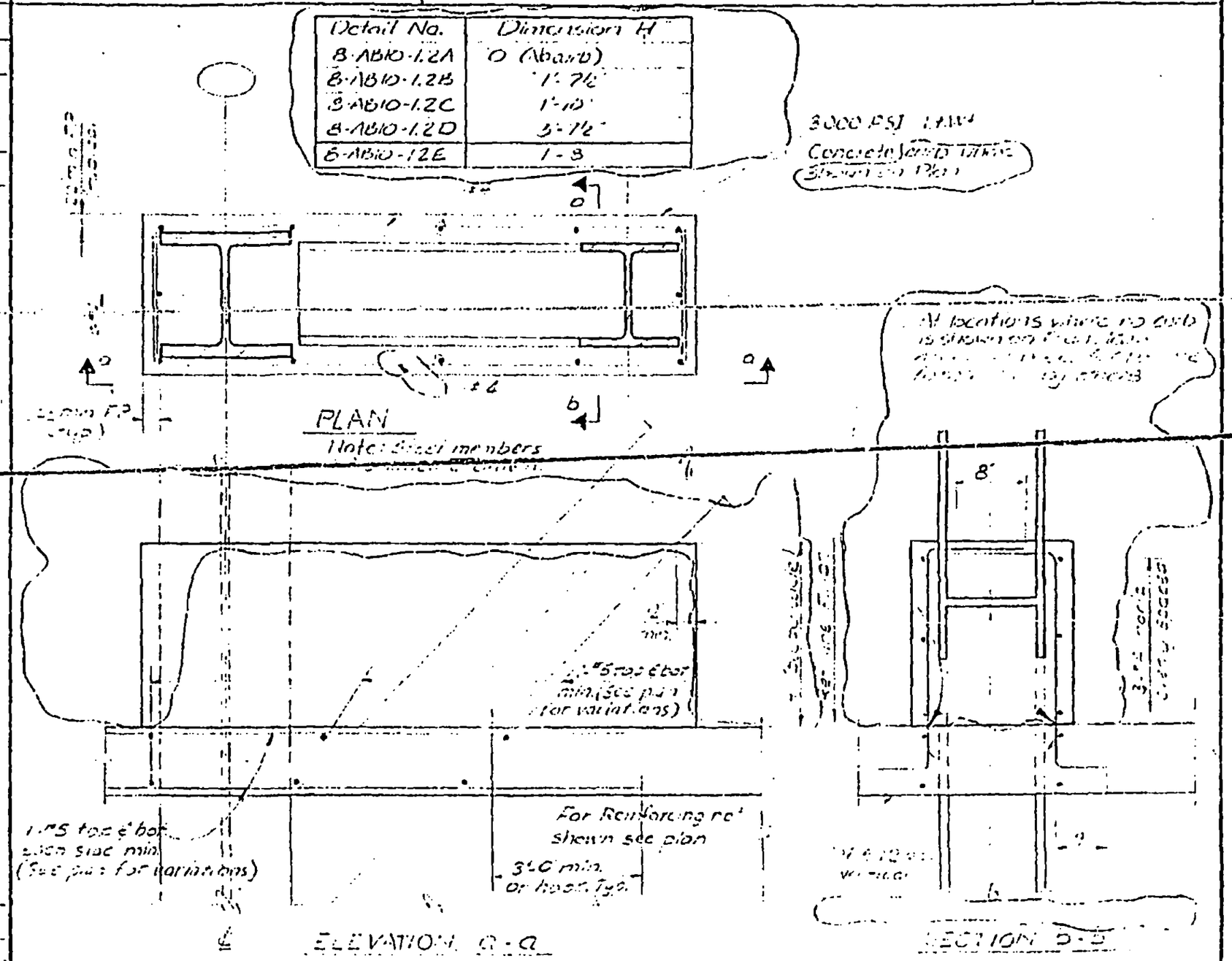

JTM
T Terrelonge

SKILLING, HELLE, CHRISTIANSEN, ROBERTSON — Structural & Civil Engineers

PROJECT: THE WORLD TRADE CENTER | TITLE: TYPICAL CURB DETAIL - FLOOR 107 | DATE: 11-23-70

REVISIONS
6-16-72
7-27-73 (As built)
9-12-73
7-12-74

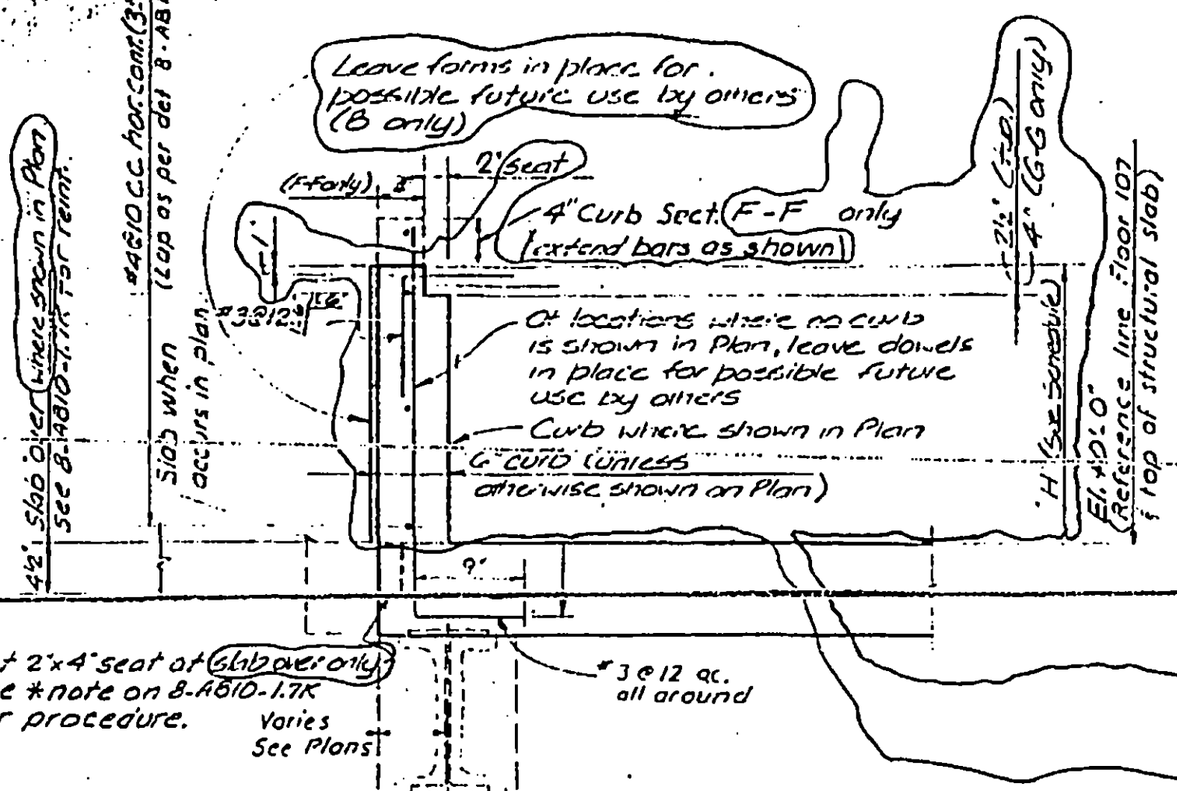

Section	"H"
A-A	0' (no curb)
B-B	0 (no curb)
C-C	1'-10"
D-D	1'-6"
E-E	3'-10"
F-F	1'-10"
G-G	1'-10½"
H-H	2'-0"

Note: See detail 8 AB10-1.4 for typical core slab detail

Section A-A
Section B-B
Section C-C
Section D-D
Section E-E
Section F-F
Section G-G
Section H-H

LICENSED PROFESSIONAL ENGINEER — LESLIE E. ROBERTSON — No 34360 — UNIVERSITY OF THE STATE OF NEW YORK

DESIGNED JTM
DRAWN F. Smith
CHECKED LER

8-AB10-1.3

SKILLING, HELLE, CHRISTIANSEN, ROBERTSON — Structural & Civil Engineers

PROJECT: THE WORLD TRADE CENTER | TITLE: TYPICAL CORE SLAB DETAIL - FL.107 | DATE: 11-23-70

REVISIONS

6-16-72

7-27-73 (As built)

9-12-73

7-12-74

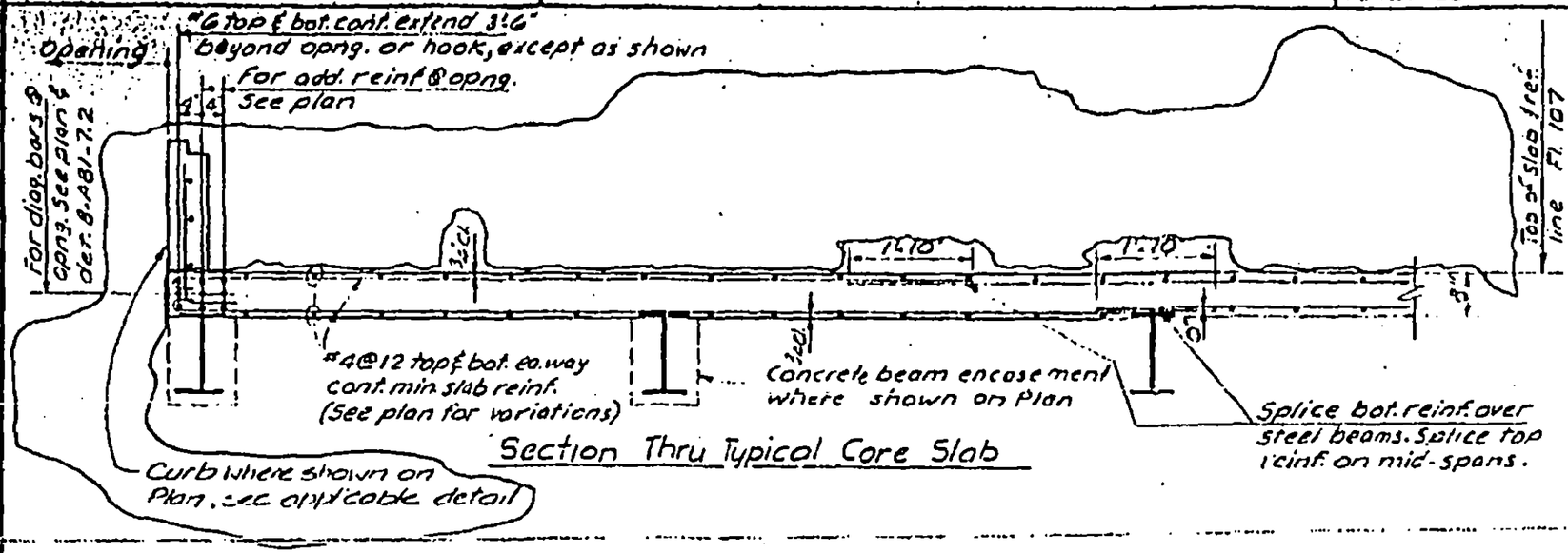

Section Thru Typical Core Slab

LICENSED PROFESSIONAL ENGINEER — LESLIE E. ROBERTSON — No. 34360 — UNIVERSITY OF THE STATE OF NEW YORK

DESIGNED: JTM

DRAWN: F. Smith

CHECKED: (illegible)

8-AB10-1.4

SKILLING, HELLE, CHRISTIANSEN, ROBERTSON — Structural & Civil Engineers

PROJECT: THE WORLD TRADE CENTER | TITLE: TYPICAL DETAILS - CORE AREA - FLOOR 107 | DATE: 11-23-70

REVISIONS

6-16-72

7-27-73 (As built)

9-12-73

10-4-73

7-12-74

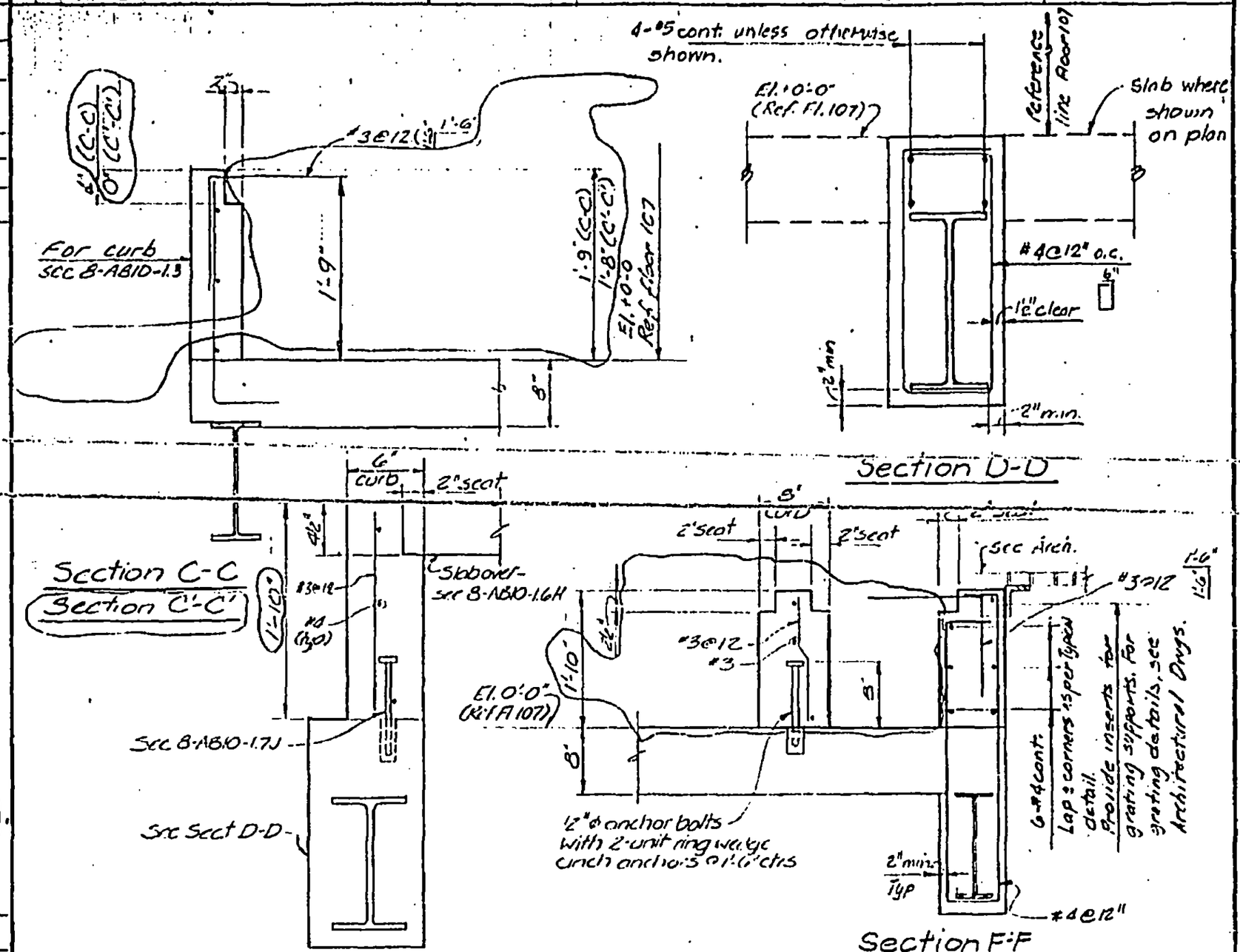

LICENSED PROFESSIONAL ENGINEER — LESLIE E. ROBERTSON — No. 34380 — UNIVERSITY OF THE STATE OF NEW YORK

DESIGNED: J.T.M.

DRAWN: J. Adams

REVIEWED: [signature]

8-AB10-1.5

SKILLING HELLE CHRISTIANSEN ROBERTSON — Structural & Civil Engineers

PROJECT: THE WORLD TRADE CENTER | TITLE: TYPICAL DETAILS CORE AREA - FLOOR 107 | DATE: 11-23-70

REVISIONS
- 6-16-72
- 7-27-73 (As built)
- 9-12-73
- 10-4-73
- 7-12-74

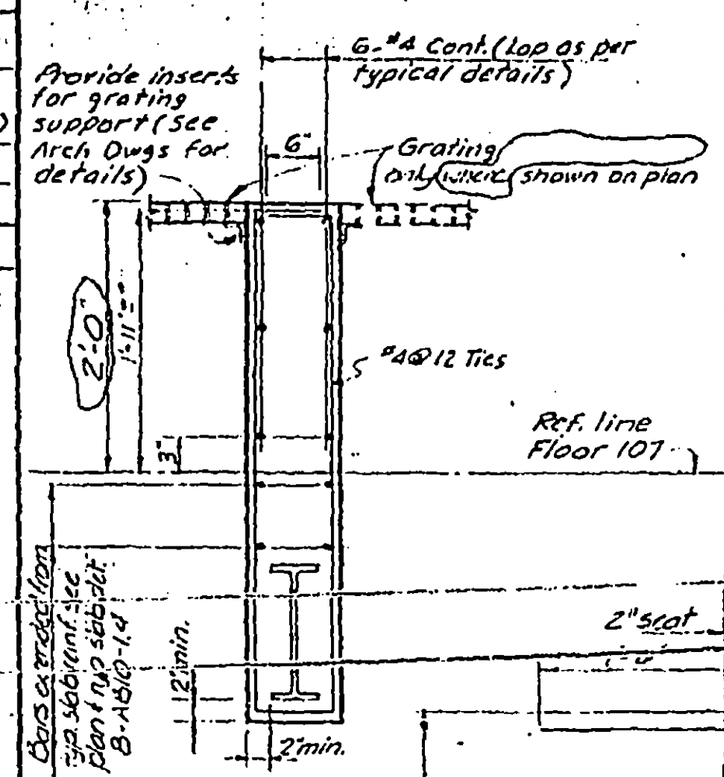

Section G-G

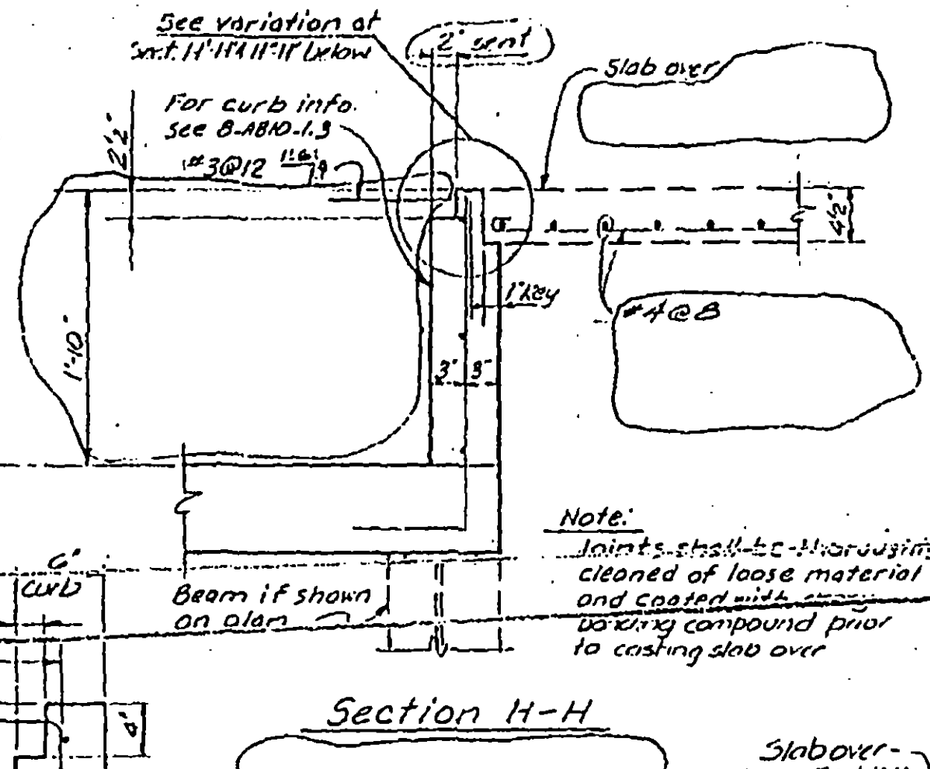

Section H-H

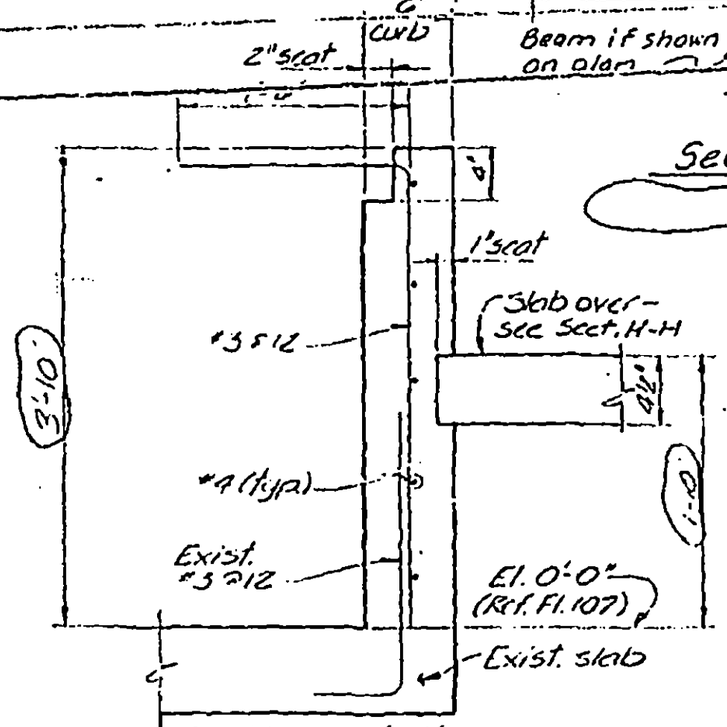

Section H'-H'

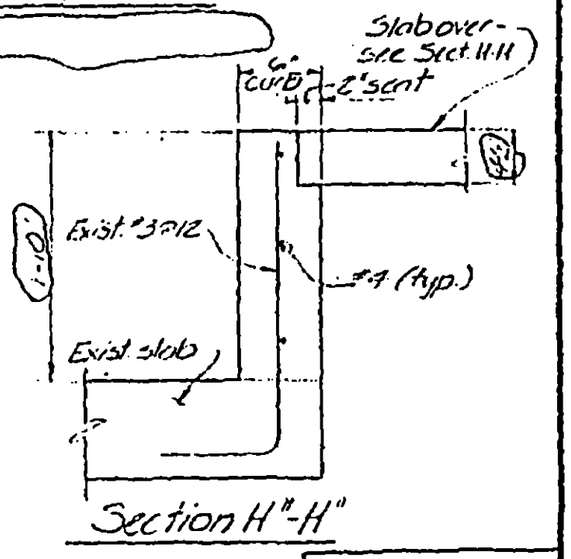

Section H"-H"

LICENSED PROFESSIONAL ENGINEER — LESLIE E. ROBERTSON — No. 34360 — UNIVERSITY OF THE STATE OF NEW YORK

DESIGNED L. QUIRKO
DRAWN A. FRANQUI
CHECKED LEROB

8-AB10-1.6

SKILLING, HELLE, CHRISTIANSEN, ROBERTSON — Structural & Civil Engineers

PROJECT: THE WORLD TRADE CENTER | TITLE: TYPICAL DETAILS - CORE AREA - FLOOR 107 | DATE: 9-12-73

REVISIONS
7-12-74

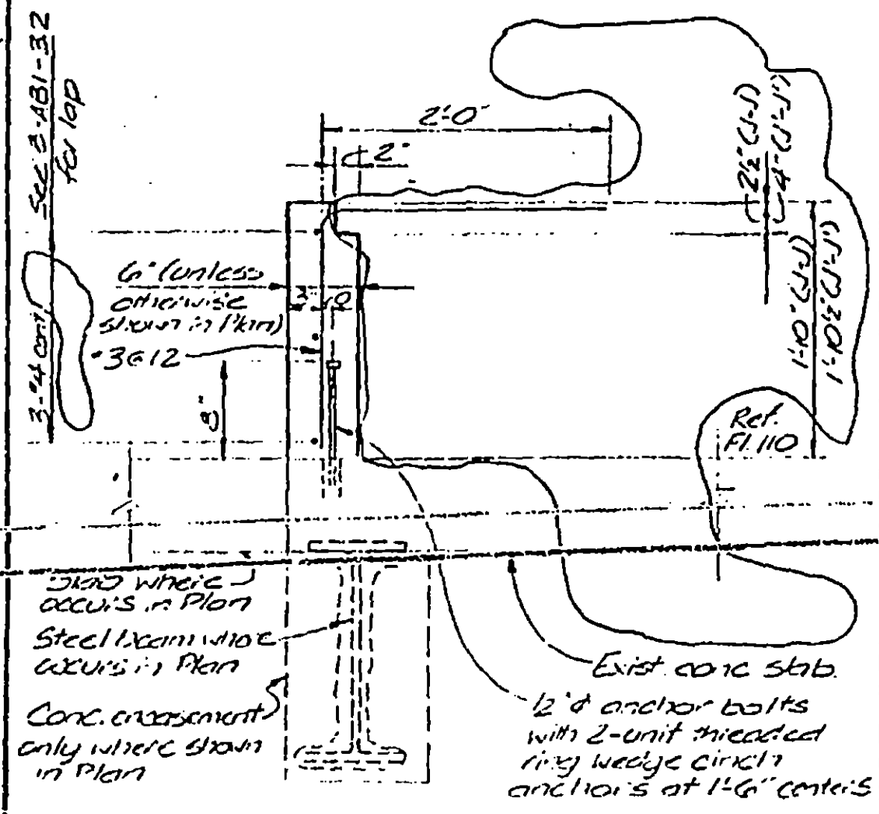

Section J-J
Section J'-J'

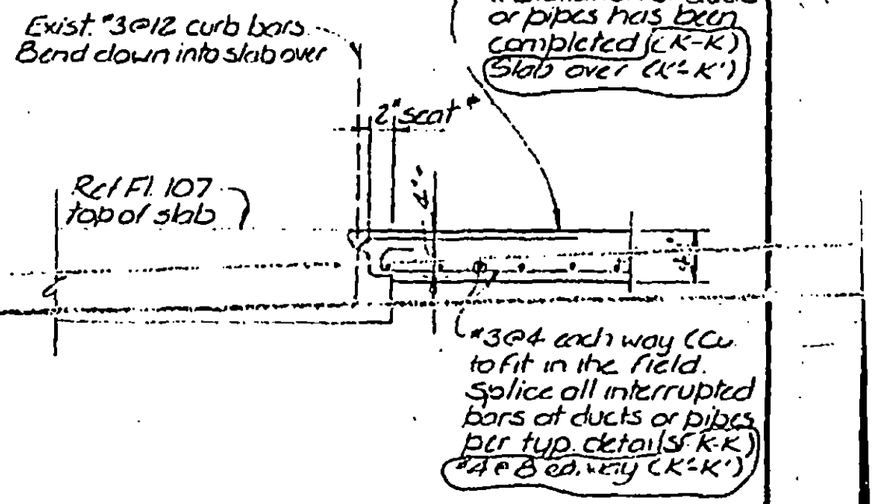

* Cut 2"x4" seat as shown without damaging existing reinforcing. Clean & roughen entire surface of existing concrete at joint prior to casting new concrete

Section K-K
Section K'-K'

LICENSED PROFESSIONAL ENGINEER — LESLIE E. ROBERTSON — No. 34360 — UNIVERSITY OF THE STATE OF NEW YORK

DESIGNED JTM
DRAWN J Balk
CHECKED

B-AB10-1.7

SKILLING, HELLE, CHRISTIANSEN, ROBERTSON — Structural & Civil Engineers

PROJECT: THE WORLD TRADE CENTER | TITLE: TYPICAL DETAILS-CORE AREA - FLOOR 107 | DATE: 9-12-73

REVISIONS

7-12-74

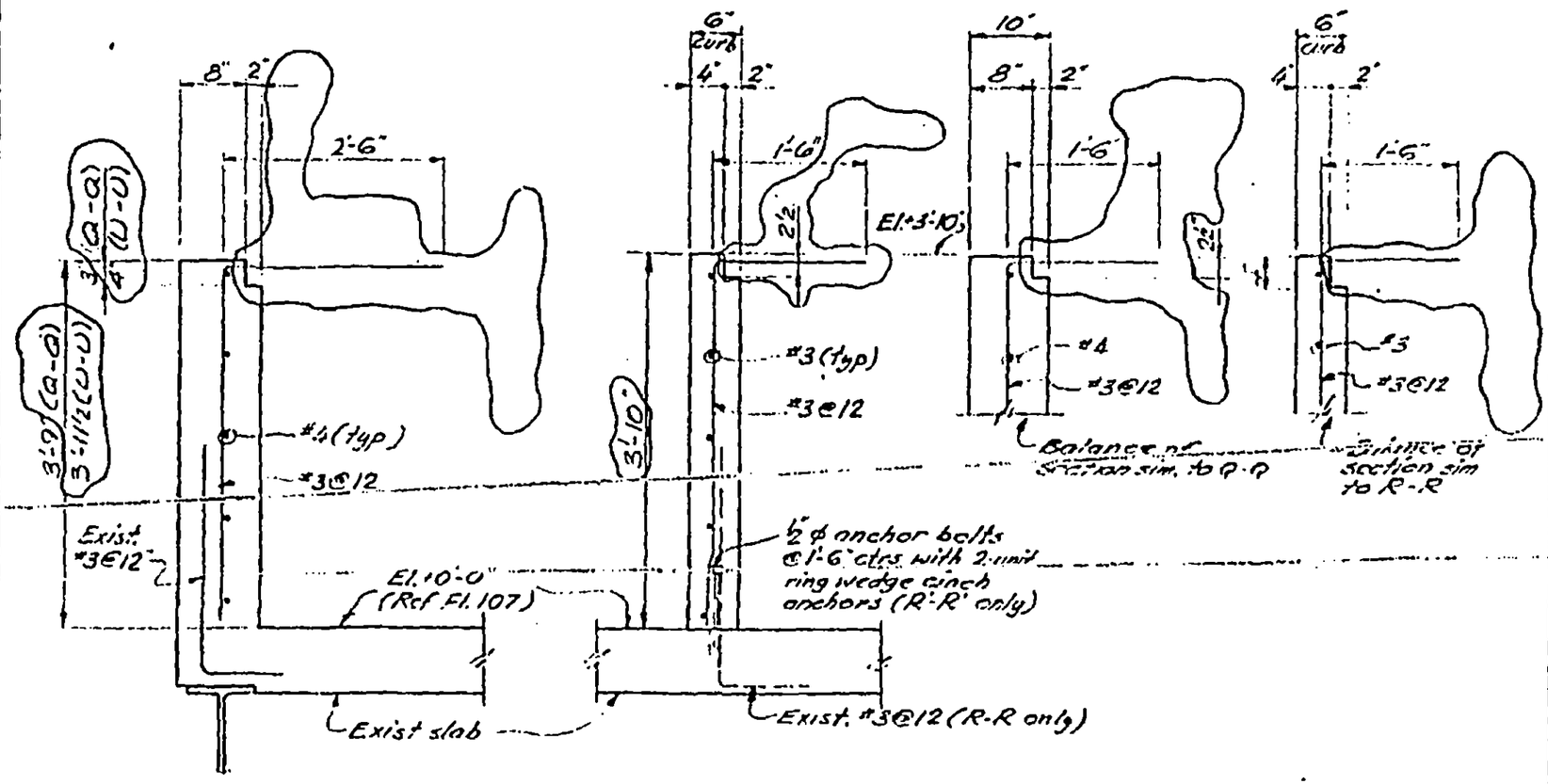

Section Q-Q / Section U-U | Section R-R / Section R'-R' | Section S-S | Section T-T

DESIGNED: J T M

DRAWN: J G

CHECKED:

S-AB10-1.9

SKILLING, HELLE, CHRISTIANSEN, ROBERTSON | Structural & Civil Engineers

PROJECT: THE WORLD TRADE CENTER | TITLE: SECTIONS AT CORE AREA-FLOOR 107 | DATE: 11-23-70

REVISIONS

6-16-72

7-27-73 (As built)

9-12-73

7-12-74

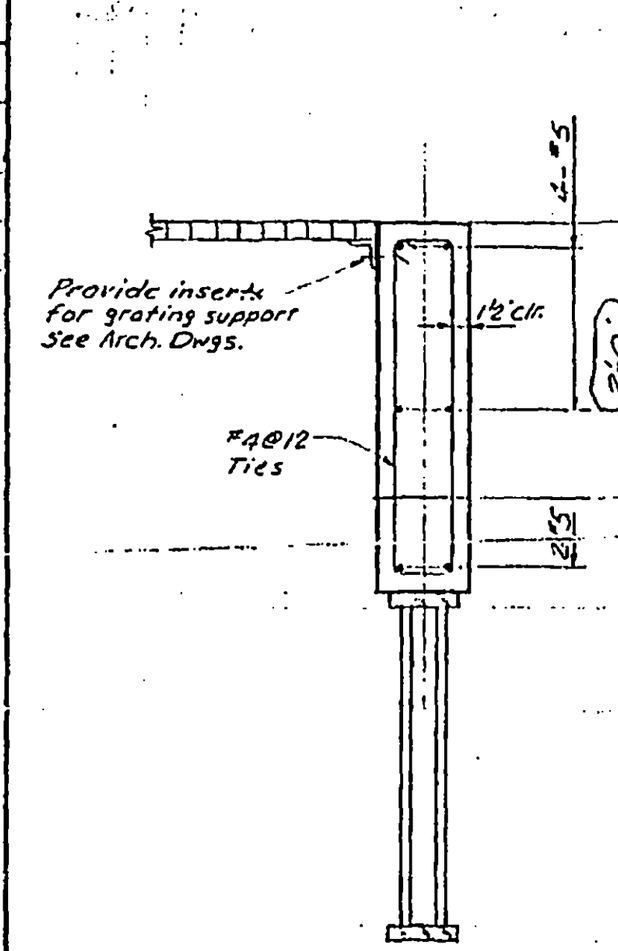

Section A-A

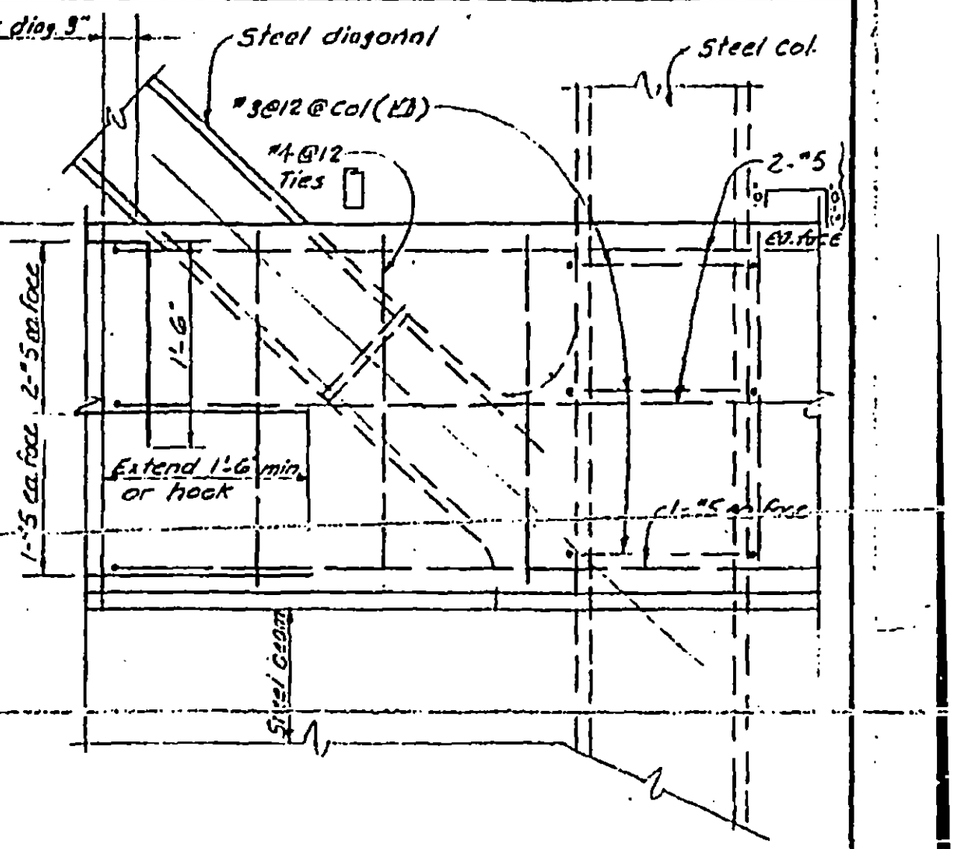

Section B-B

LICENSED PROFESSIONAL ENGINEER LESLIE E. ROBERTSON No. 34340 UNIVERSITY OF THE STATE OF NEW YORK

DESIGNED L. QUIRKO

DRAWN A. FRANQUI

CHECKED

8-AB10-2.1

SKILLING HELLE CHRISTIANSEN ROBERTSON — Structural & Civil Engineers

PROJECT THE WORLD TRADE CENTER | TITLE SECTIONS AT CORE AREA - FLOOR 107 | DATE 11-25-70

REVISIONS
3-1-71
6-16-72
7-27-73 (As built)
9-12-73
7-12-74

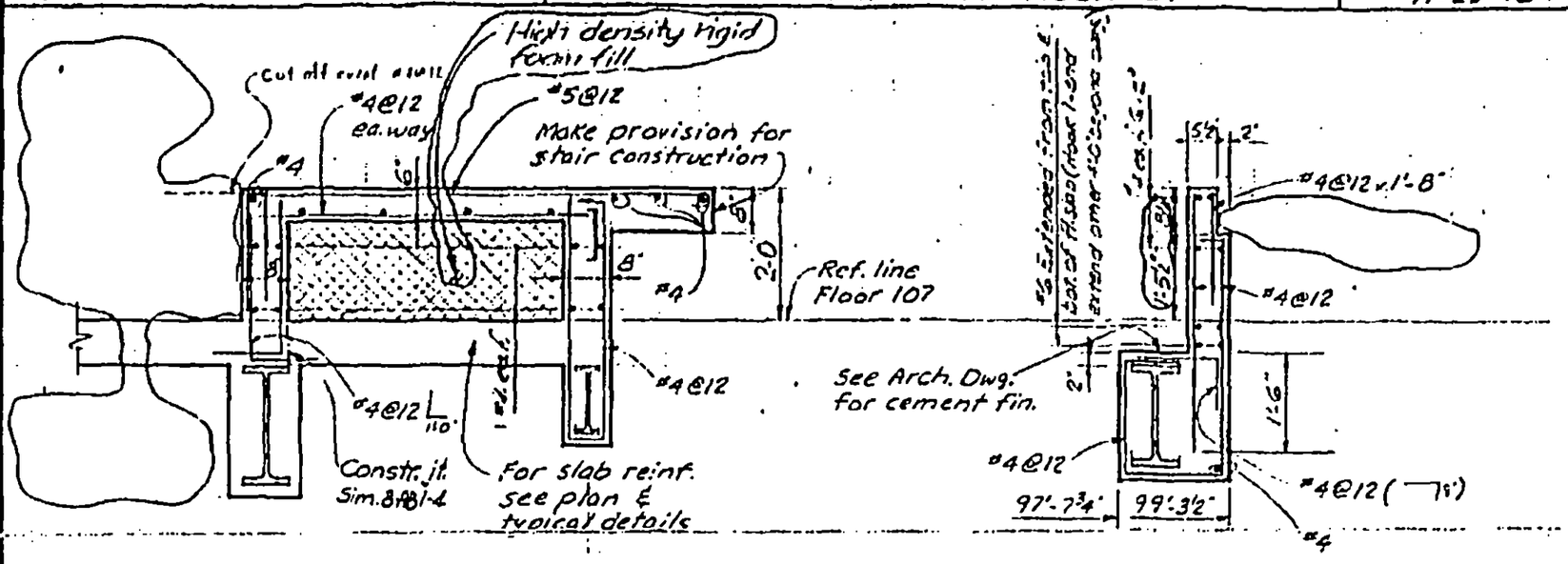

Section C-C

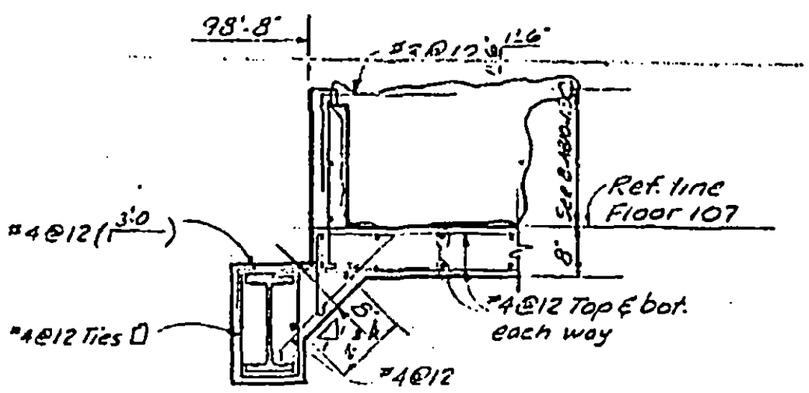

Section E-E

Section D-D

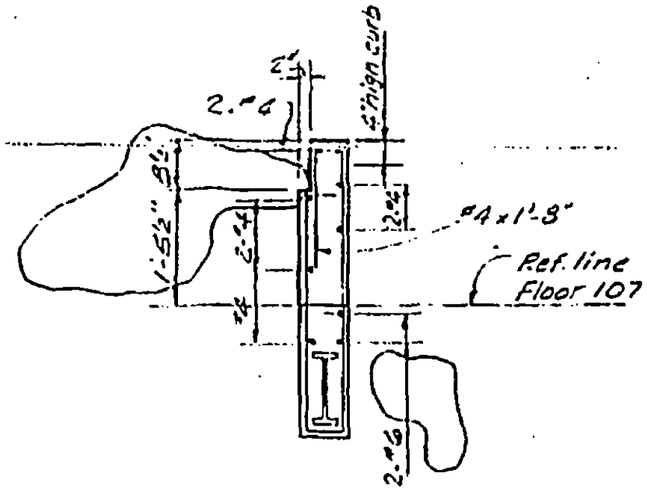

Section F-F

DESIGNED L. QUIRKO
DRAWN A. FRANQUI

B-AB10-2.2

SKILLING, HELLE, CHRISTIANSEN, ROBERTSON — Structural & Civil Engineers

PROJECT: THE WORLD TRADE CENTER | TITLE: SECTIONS AT CORE AREA - FLOOR 107 | DATE: 11-23-70

REVISIONS
- 6-16-72
- 7-27-73 (As built)
- 9-12-73
- 10-4-73
- 7-12-74

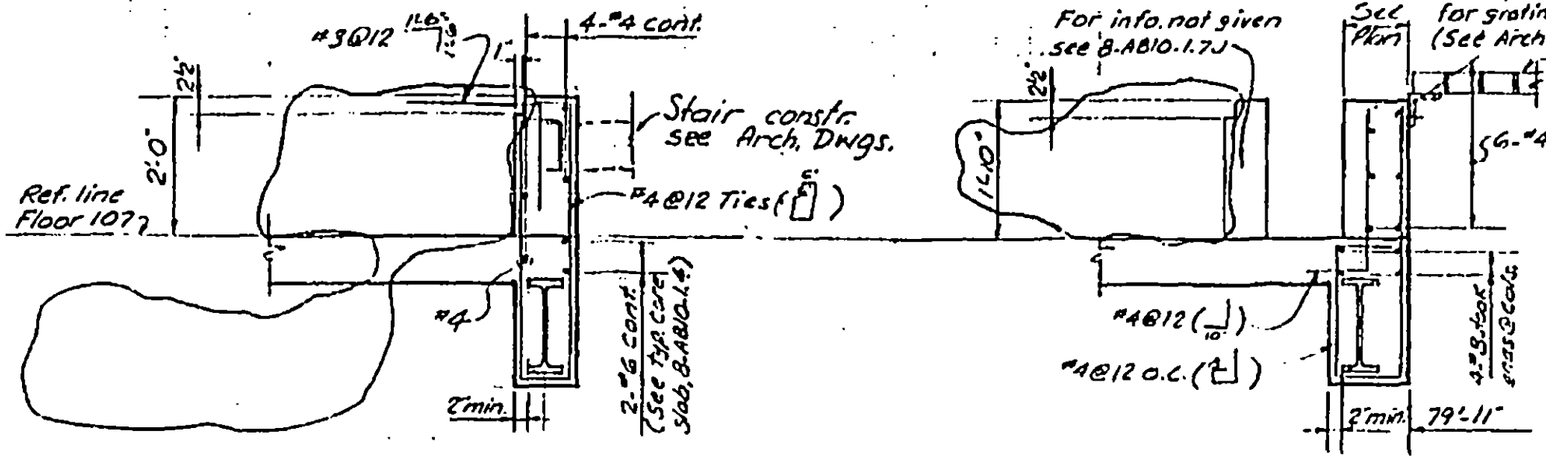

Section G-G

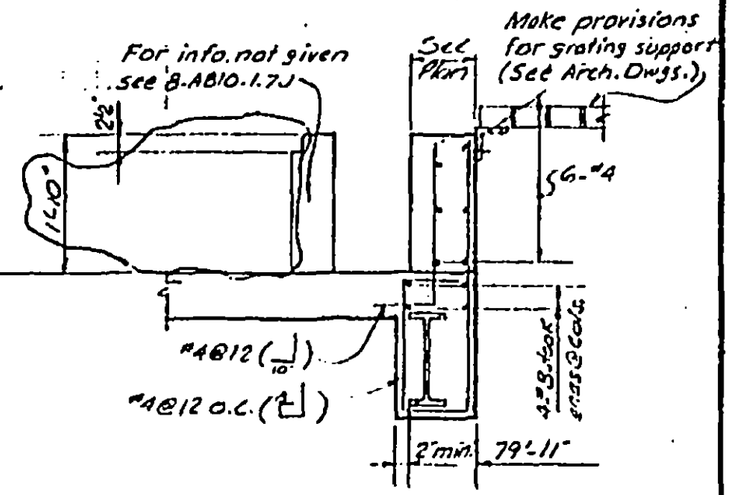

Section H-H

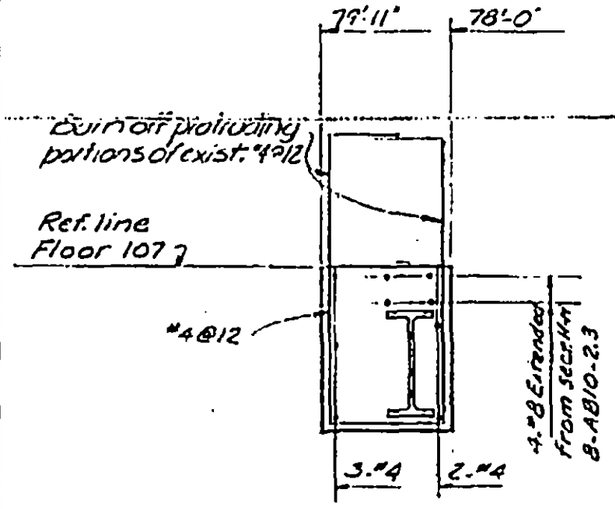

Section K-K

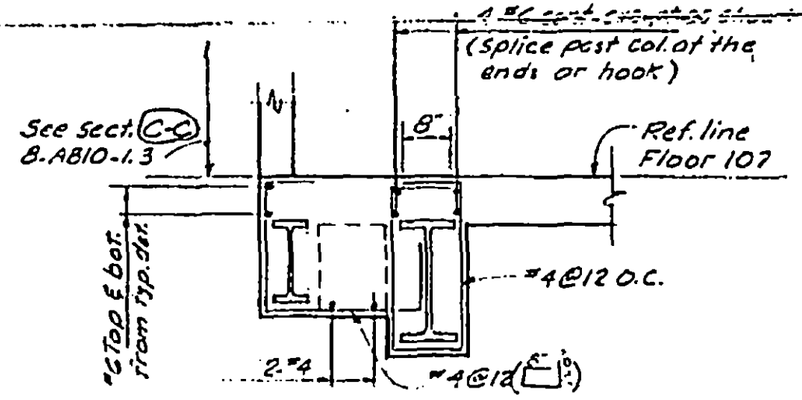

Section L-L

Note:
For slab reinf. see plan & 8-AB10-1.4

8-AB10-2.3

LICENSED PROFESSIONAL ENGINEER — LESLIE E. ROBERTSON — No. 34940 — UNIVERSITY OF THE STATE OF NEW YORK

DESIGNED L. QUIRKO
DRAWN A. FRANQUI
REVISED

SKILLING, HELLE, CHRISTIANSEN, ROBERTSON — Structural & Civil Engineers

PROJECT THE WORLD TRADE CENTER | TITLE SECTIONS AT CORE AREA - FLOOR 107 | DATE 9-12-73

REVISIONS
7-12-74

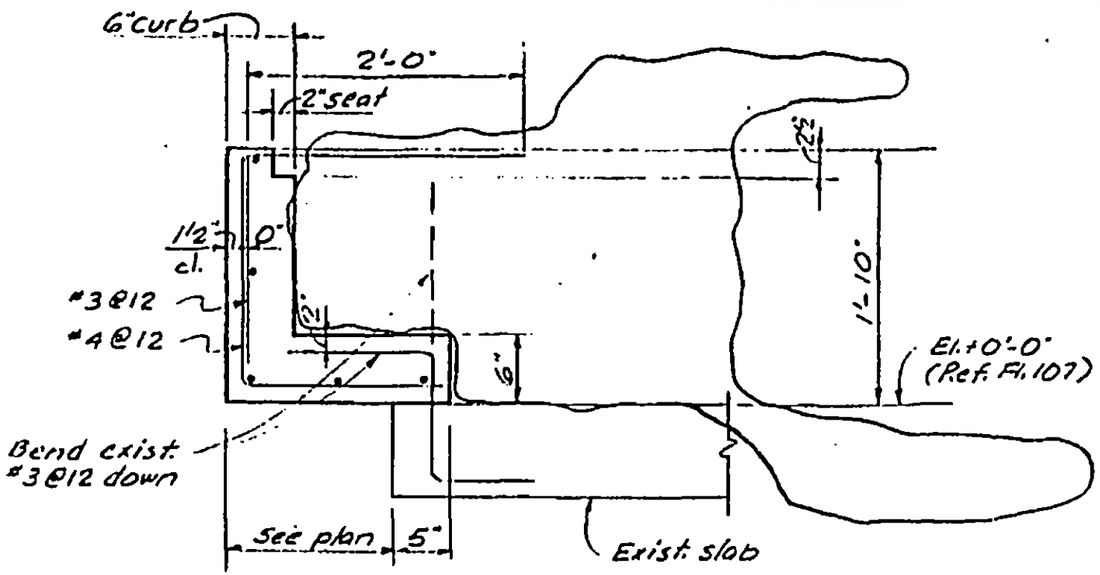

Section M-M

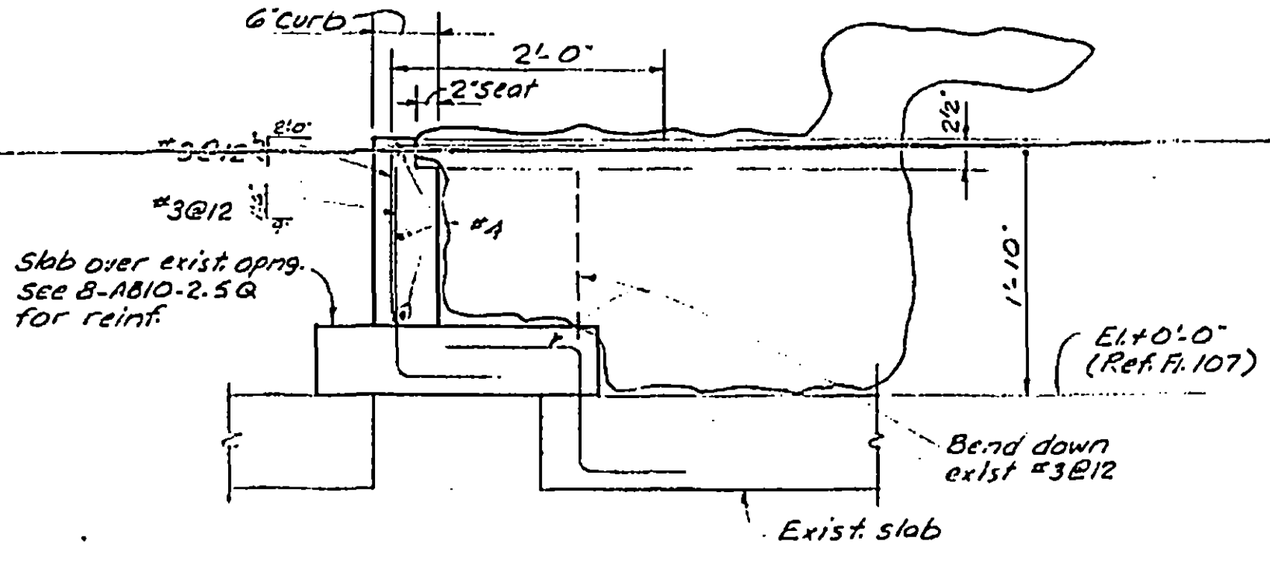

Section N-N

LICENSED PROFESSIONAL ENGINEER · LESLIE E. ROBERTSON · No. 34380 · UNIVERSITY OF THE STATE OF NEW YORK

DESIGNED JTM
DRAWN ALF
REVIEWED

S-AB10-2.4

SKILLING, HELLE, CHRISTIANSEN, ROBERTSON — Structural & Civil Engineers

PROJECT: THE WORLD TRADE CENTER | TITLE: SECTIONS AT CORE AREA - FLOOR 107 | DATE: 9-12-73

REVISIONS

7-12-74

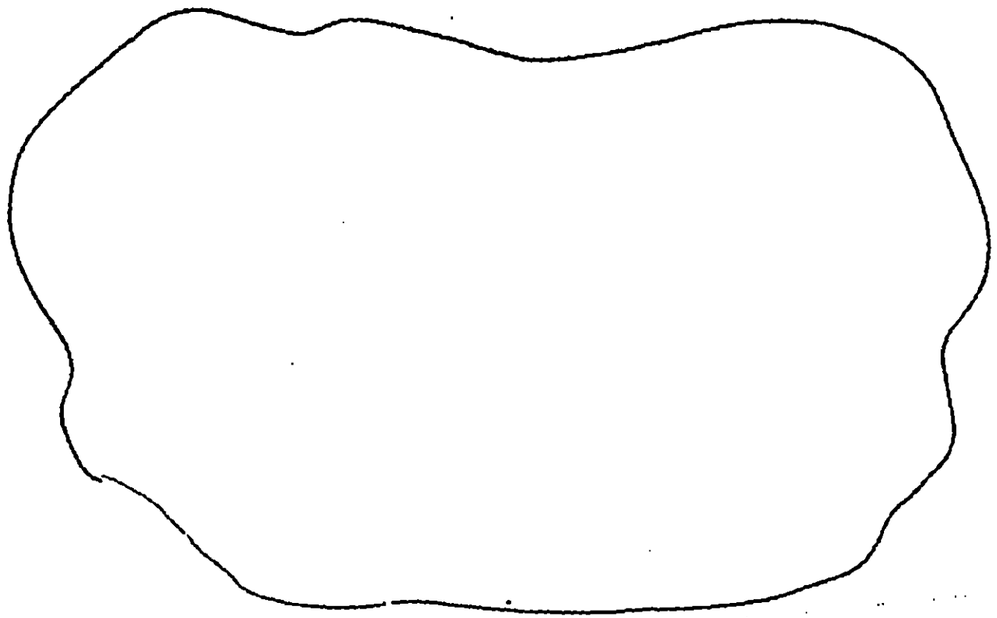

* Use this reinf. unless otherwise shown in Plan.

4 @ 12" c.c. (min. 3 *4) - long direction of span, both ends

4 @ 10" c.c. - short direction of span, bottom layer, both ends.

5" overlap (typ. all around) unless otherwise noted

4½" new slab over unless otherwise shown in plan

Bend exist dowels down into slab over (typ. all around).

New slab over

At locations where there are no exist dowels, coat this entire surface with epoxy bonding compound before casting new slab over.

Exist. slab

Opening in exist slab

Section Q-Q

LICENSED PROFESSIONAL ENGINEER — LESLIE E. ROBERTSON — No. 34360 — UNIVERSITY OF THE STATE OF NEW YORK

DESIGNED J.T.M.

DRAWN J.G.

REVIEWED L.E.R.

S-1B10-2.5

SKILLING, HELLE, CHRISTIANSEN, ROBERTSON — Structural & Civil Engineers

PROJECT: THE WORLD TRADE CENTER | TITLE: SECTIONS AT CORE AREA - FLOOR 107 | DATE: 9-12-73

REVISIONS
10-4-73
7-12-74

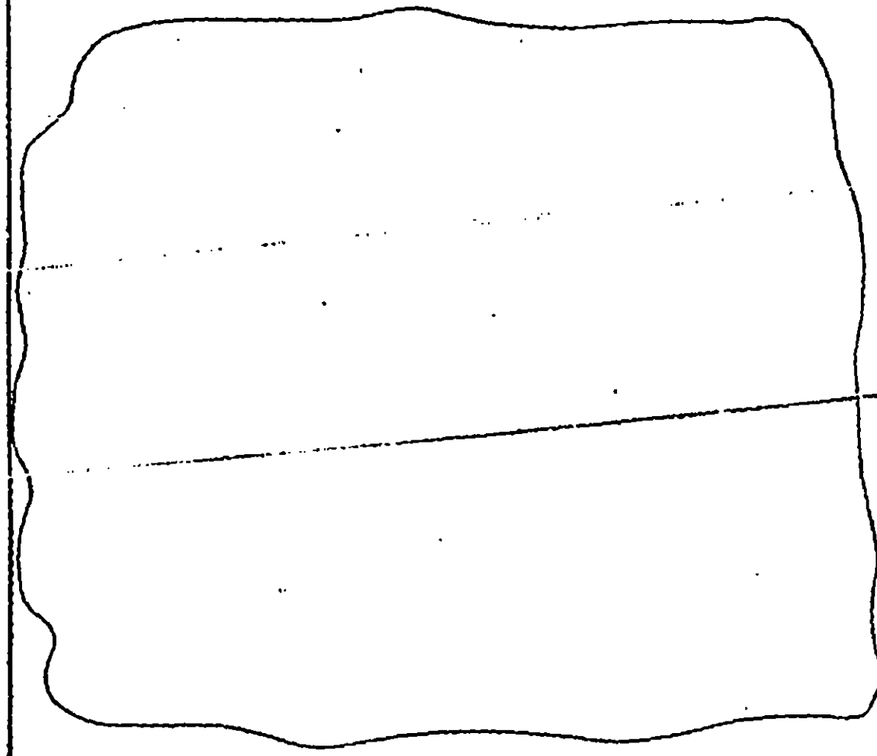

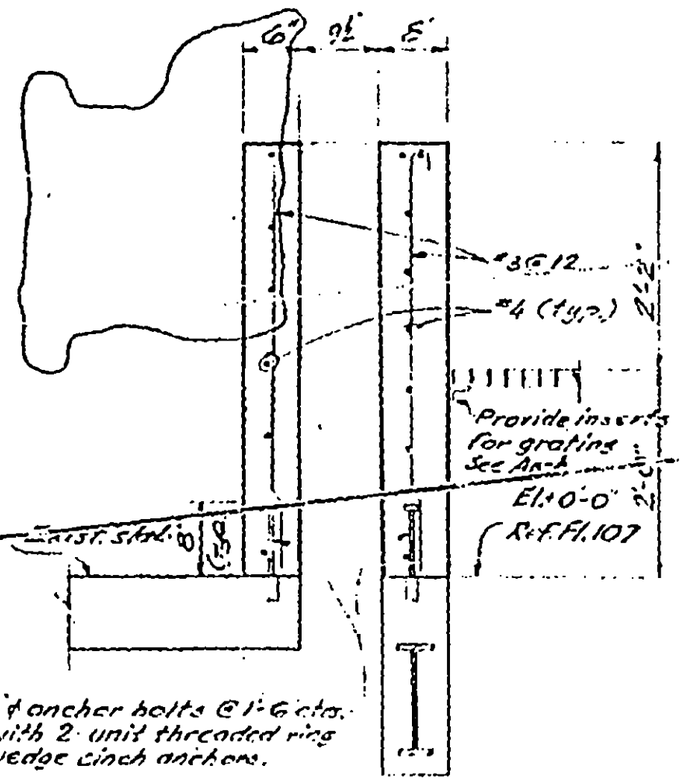

Section S-S

LICENSED PROFESSIONAL ENGINEER — LESLIE E. ROBERTSON — No. 34360 — UNIVERSITY OF THE STATE OF NEW YORK

DESIGNED J.T.M.
DRAWN J.G.
REVIEWED

S-AR.10-2.6

SKILLING, HELLE, CHRISTIANSEN, ROBERTSON — Structural & Civil Engineers

PROJECT: THE WORLD TRADE CENTER | TITLE: SECTIONS AT CORE AREA - FLOOR 107 | DATE: 9-12-73

REVISIONS
10-4-73
7-12-74

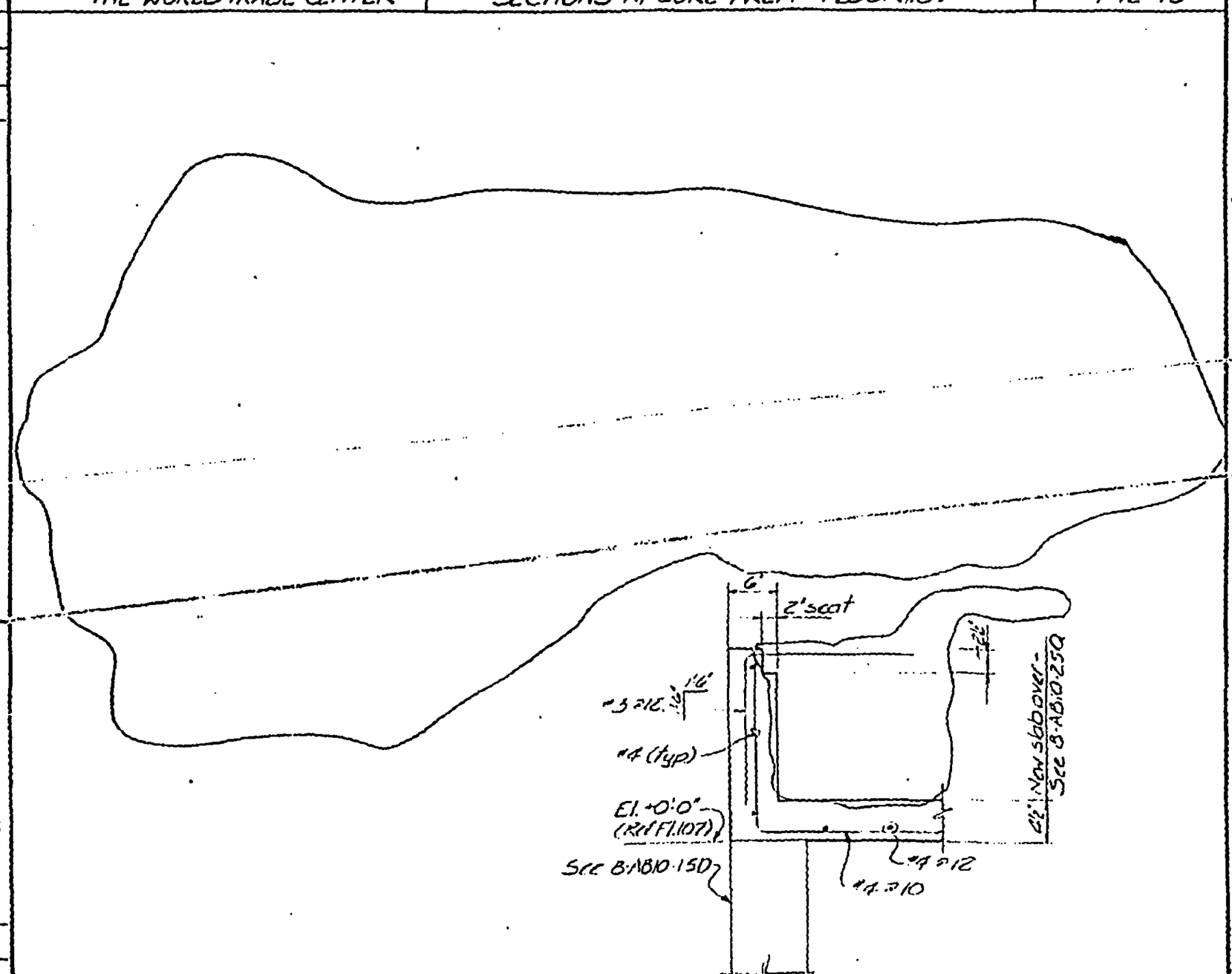

Section W-W

B-AB10-2.7

LICENSED PROFESSIONAL ENGINEER
LESLIE E. ROBERTSON
NO 24360
UNIVERSITY OF THE STATE OF NEW YORK

DESIGNED JTM
DRAWN J Burke
REVIEWED JTM

SKILLING, HELLE, CHRISTIANSEN, ROBERTSON — Structural & Civil Engineers

PROJECT: THE WORLD TRADE CENTER | TITLE: SECTIONS AT DUMBWAITER - FLOOR 106 | DATE: 11-9-73

REVISIONS

6-27-74

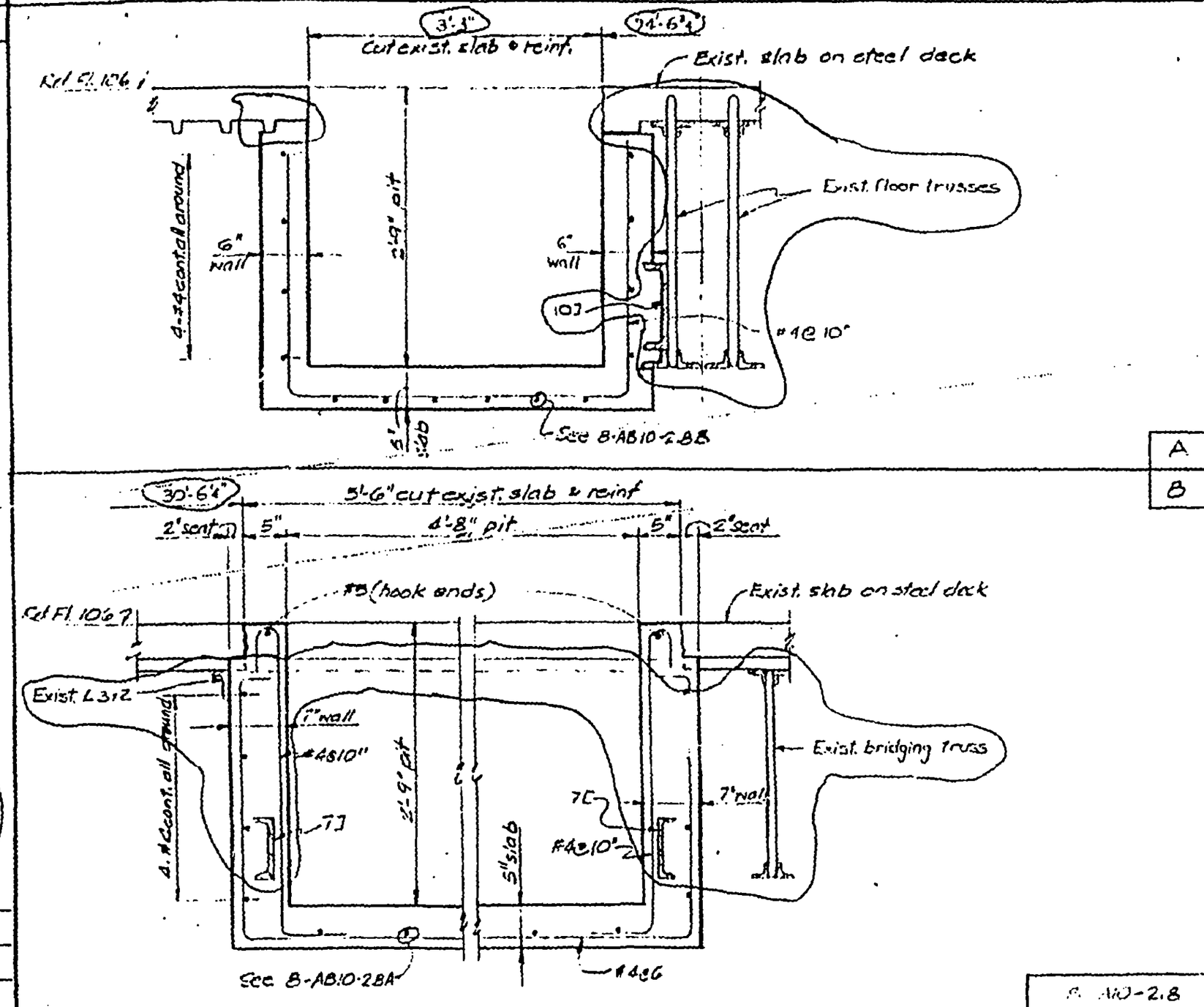

LICENSED PROFESSIONAL ENGINEER LESLIE E. ROBERTSON No. 34380 UNIVERSITY OF THE STATE OF NEW YORK

DESIGNED: JTM

DRAWN: [illegible]

REVIEWED: [illegible]

8-AB10-2.8

SKILLING, HELLE, CHRISTIANSEN, ROBERTSON — Structural & Civil Engineers

PROJECT: THE WORLD TRADE CENTER | TITLE: CONCRETE SECTIONS - RAISED LEVEL FLOOR 107 | DATE: 11-9-73

REVISIONS

6-27-74

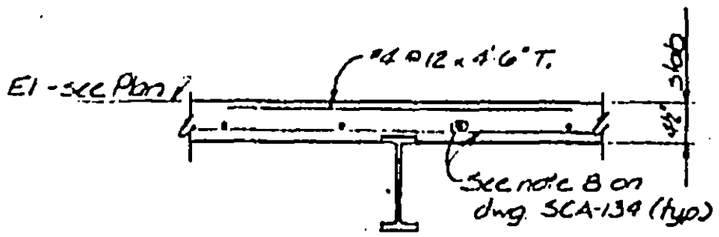

A

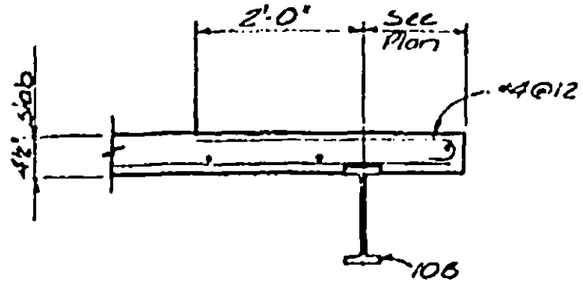

B

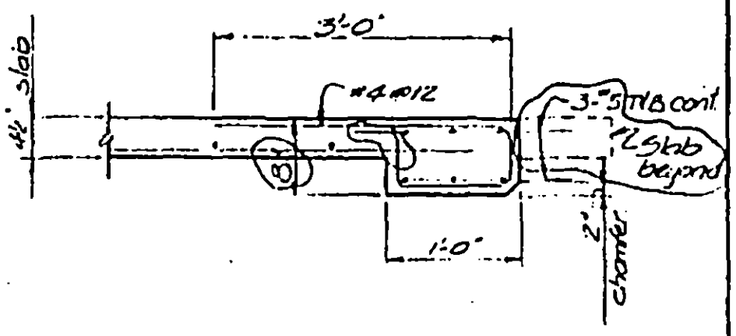

C

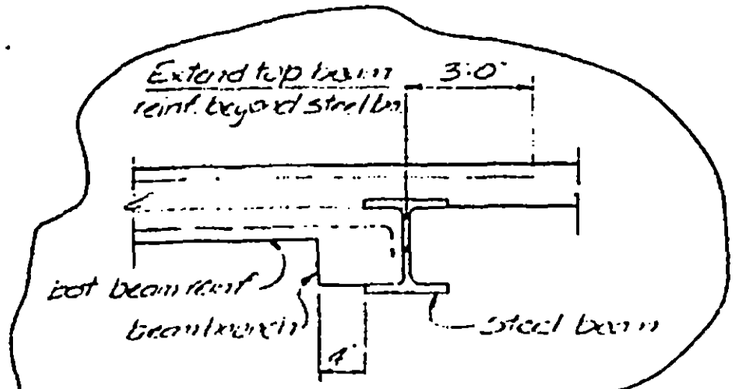

E

LICENSED PROFESSIONAL ENGINEER — LUBLIE E. ROBERTSON — No. 34960 — UNIVERSITY OF THE STATE OF NEW YORK

DESIGNED: JTM

DRAWN: [illegible]

REVIEWED: WAB

8-A10-2.10

SKILLING, HELLE, CHRISTIANSEN, ROBERTSON — Structural & Civil Engineers

PROJECT THE WORLD TRADE CENTER | TITLE CONCRETE SECTIONS RAISED LEVEL FLOOR(107) | DATE 11-9-73

REVISIONS
12-28-73
6-27-74
7-12-74

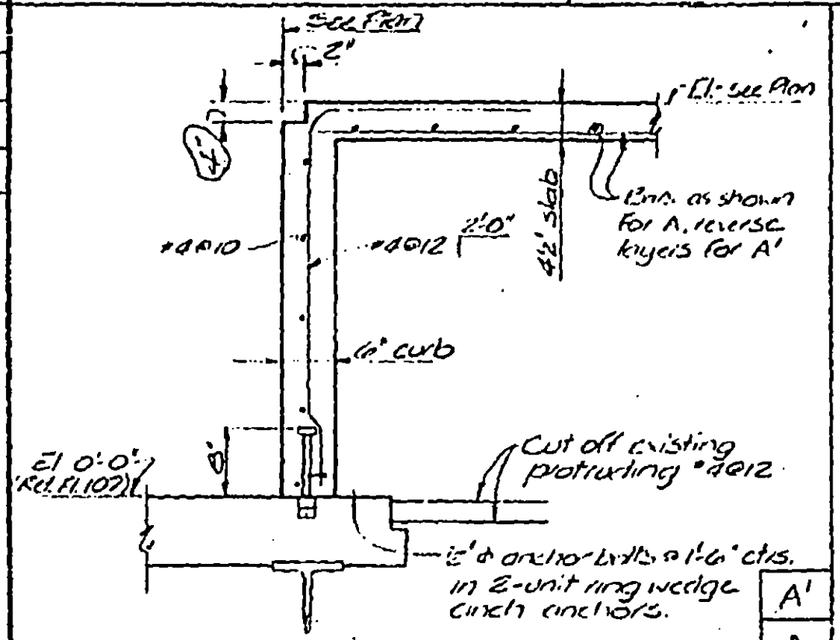

A'
A

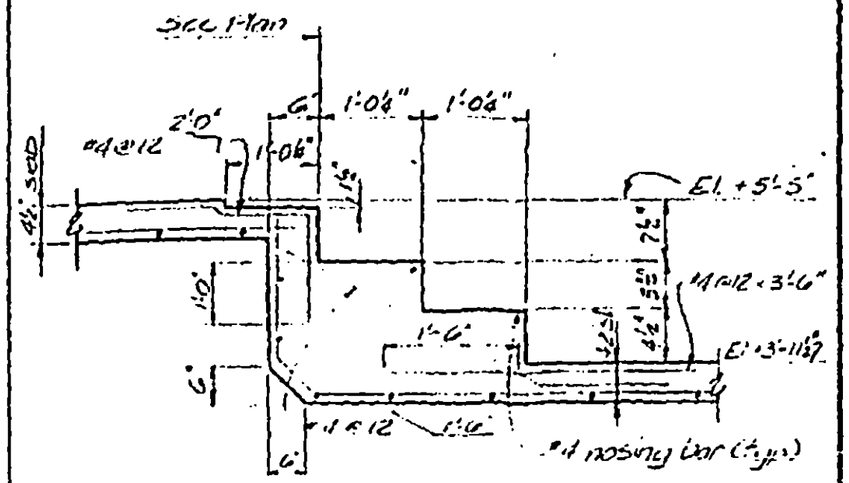

B

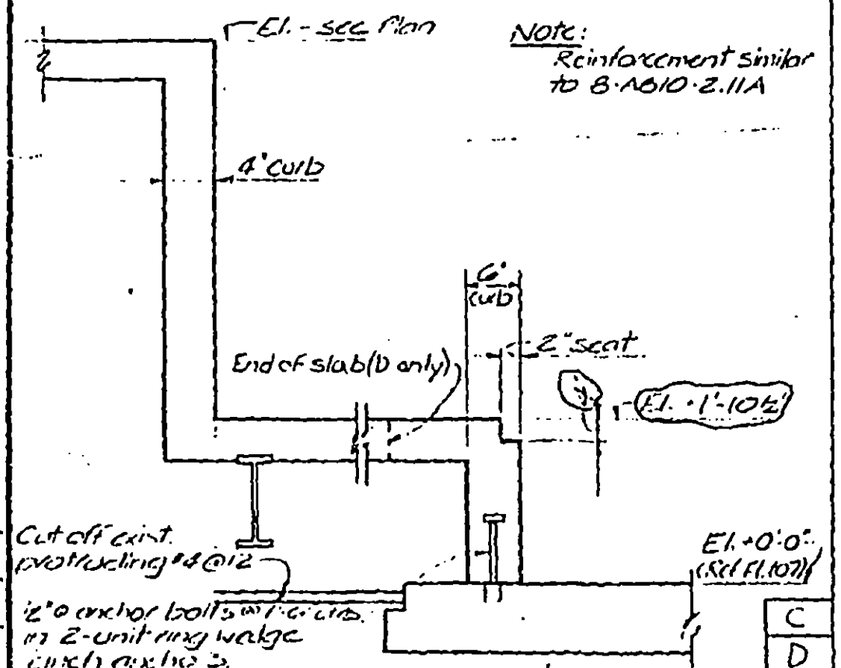

C
D

B-A10-2.11

LICENSED PROFESSIONAL ENGINEER — LESLIE E. ROBERTSON — NO. 34380 — UNIVERSITY OF THE STATE OF N.Y. 1982

DRAWN J.T.M

SKILLING, HELLE, CHRISTIANSEN, ROBERTSON — Structural & Civil Engineers

PROJECT THE WORLD TRADE CENTER | TITLE CONCRETE SECTIONS - INTERMEDIATE LEVEL FL. 107 | DATE 11-9-73

REVISIONS

6-27-74

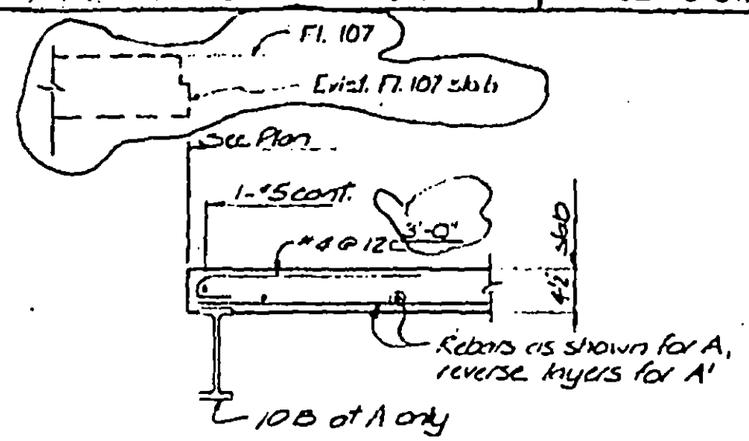

A

A'

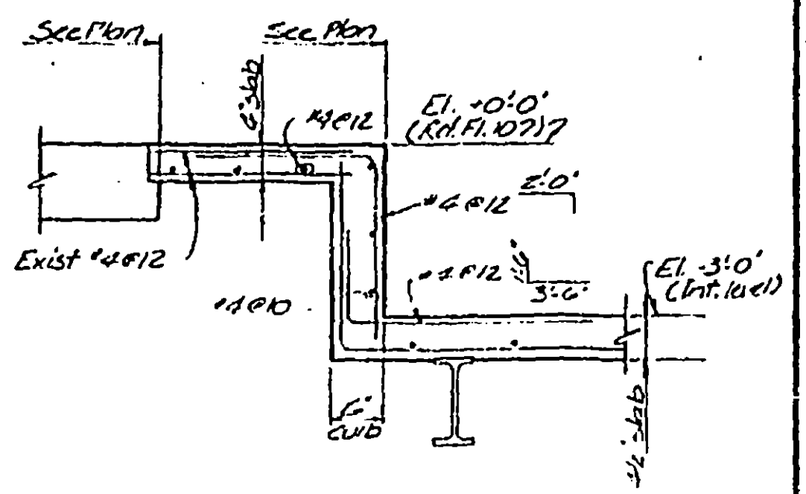

B

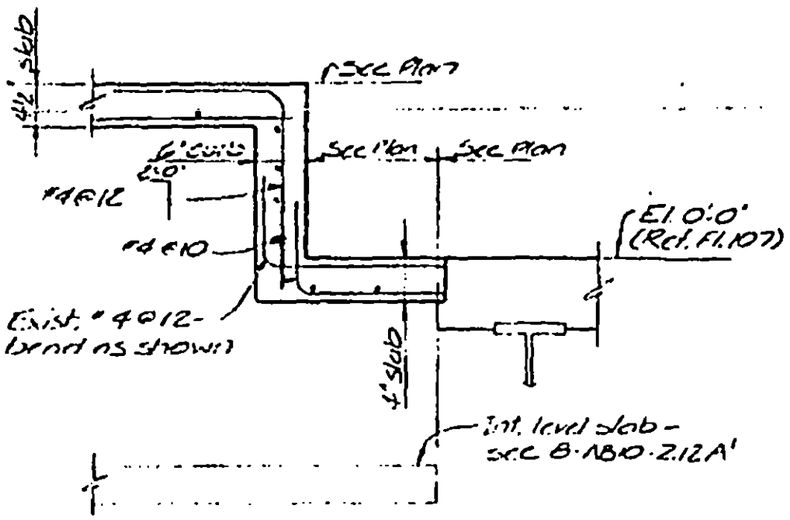

C

LICENSED PROFESSIONAL ENGINEER — LESLIE E. ROBERTSON — No. 34980 — UNIVERSITY OF THE STATE OF NEW YORK

DESIGNED J.T.M.

DRAWN J.B.

CHECKED LERobertson

B-A 10-2.12

SKILLING, HELLE, CHRISTIANSEN, ROBERTSON — Structural & Civil Engineers

PROJECT THE WORLD TRADE CENTER | TITLE TYPICAL SLAB DETAILS - FLOOR AREA - FL 107 | DATE 1/23/70

REVISIONS

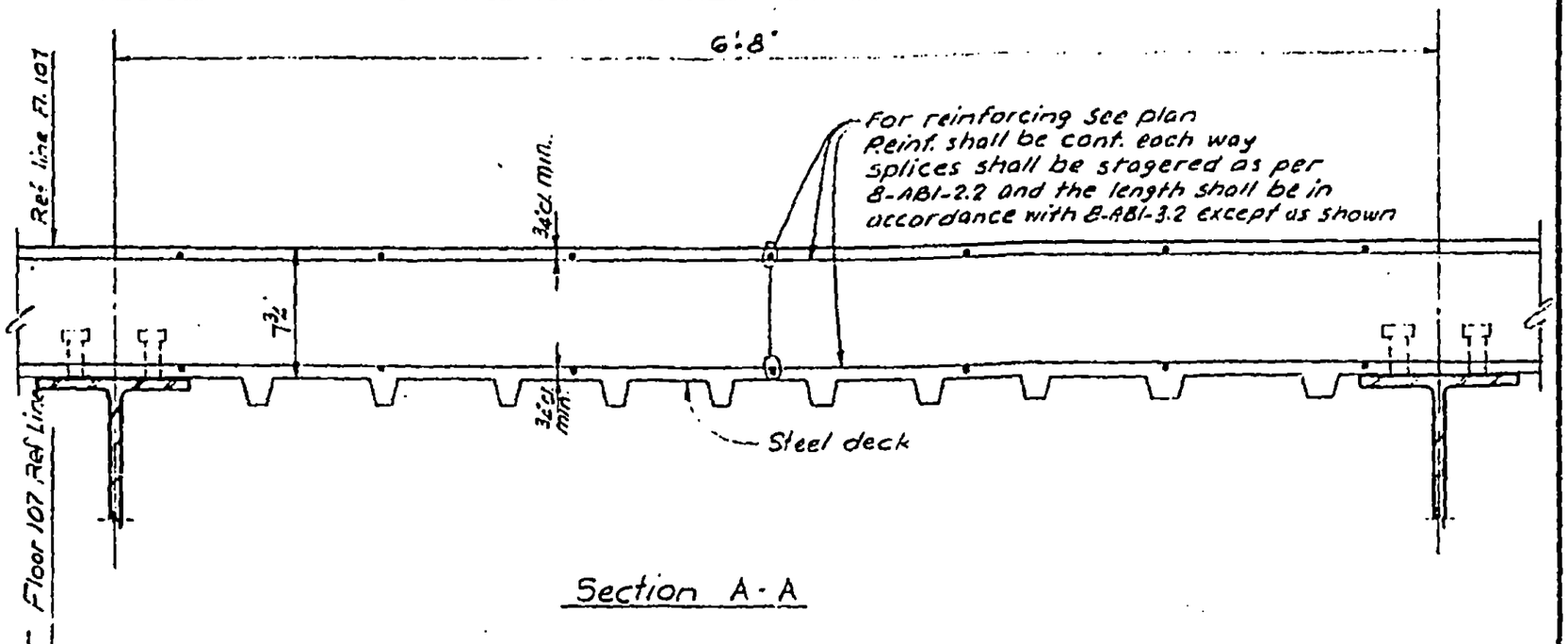

Section A-A

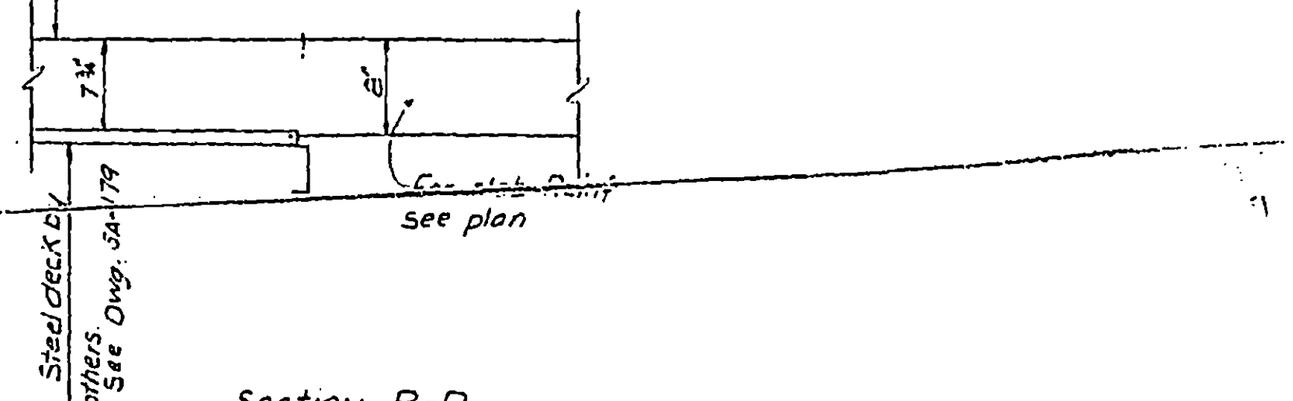

Section B-B

(Typical @ Transition between timber forms & Steel Deck)

LICENSED PROFESSIONAL ENGINEER
LESLIE E. ROBERTSON
No. 34980
UNIVERSITY OF THE STATE OF NEW YORK

DESIGNED

DRAWN
T. Terrelonge

REVIEWED

8-AB10-3.1

SKILLING, HELLE, CHRISTIANSEN, ROBERTSON — Structural & Civil Engineers

PROJECT: THE WORLD TRADE CENTER | TITLE: CONCRETE SLAB SECTIONS - FLOOR AREA - FLOOR 107 | DATE: 11/23/70

REVISIONS

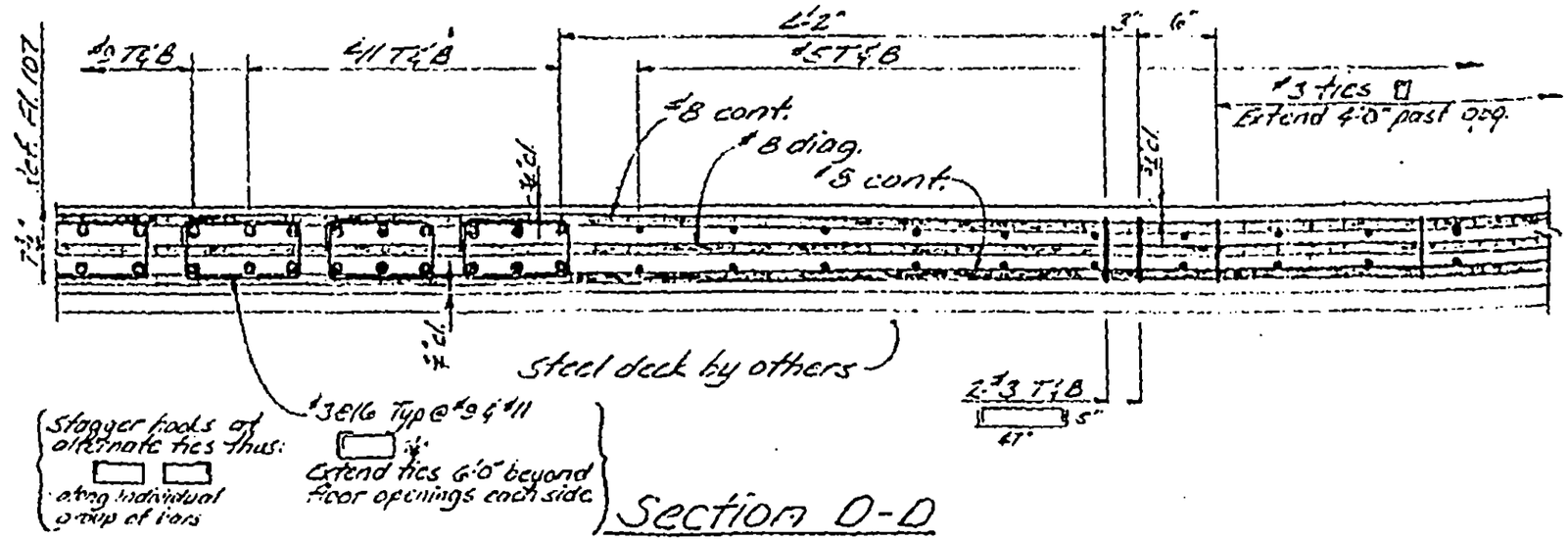

Section D-D

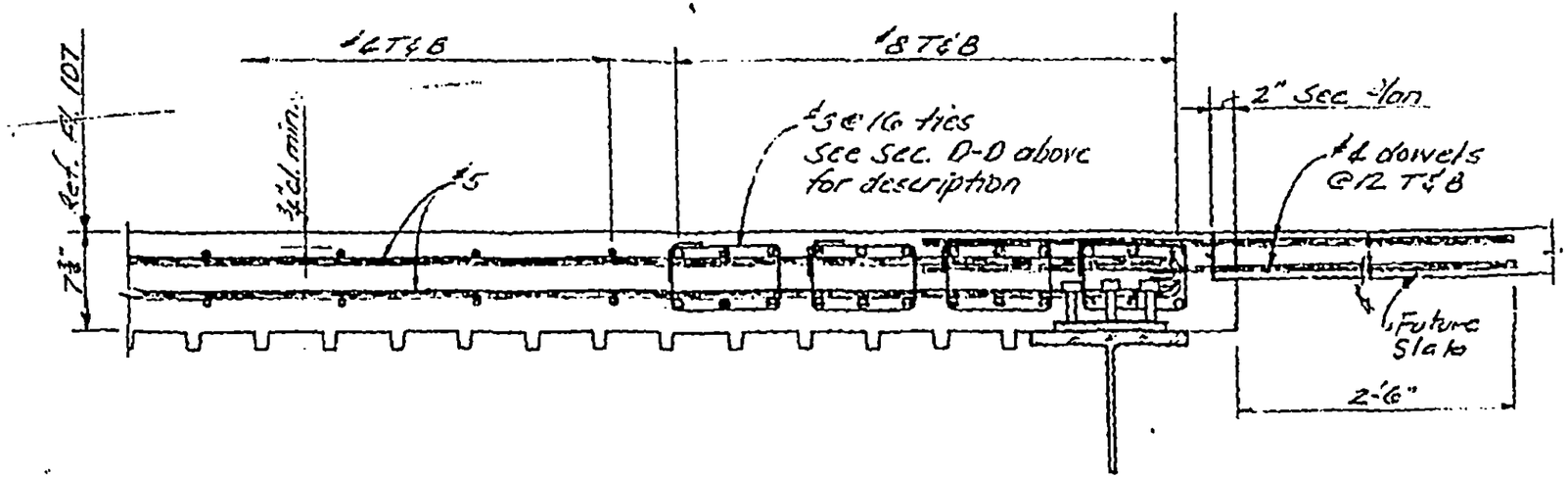

Section E-E

LICENSED PROFESSIONAL ENGINEER — LESLIE E. ROBERTSON — NO 34380 — UNIVERSITY OF THE STATE OF NEW YORK

DESIGNED

DRAWN

REVIEWED

S-1610-TE

SKILLING, HELLE, CHRISTIANSEN, ROBERTSON — Structural & Civil Engineers

PROJECT THE WORLD TRADE CENTER | TITLE CONCRETE SLAB SECTIONS - FLOOR AREA - FLOOR 107 | DATE 11/23/70

REVISIONS

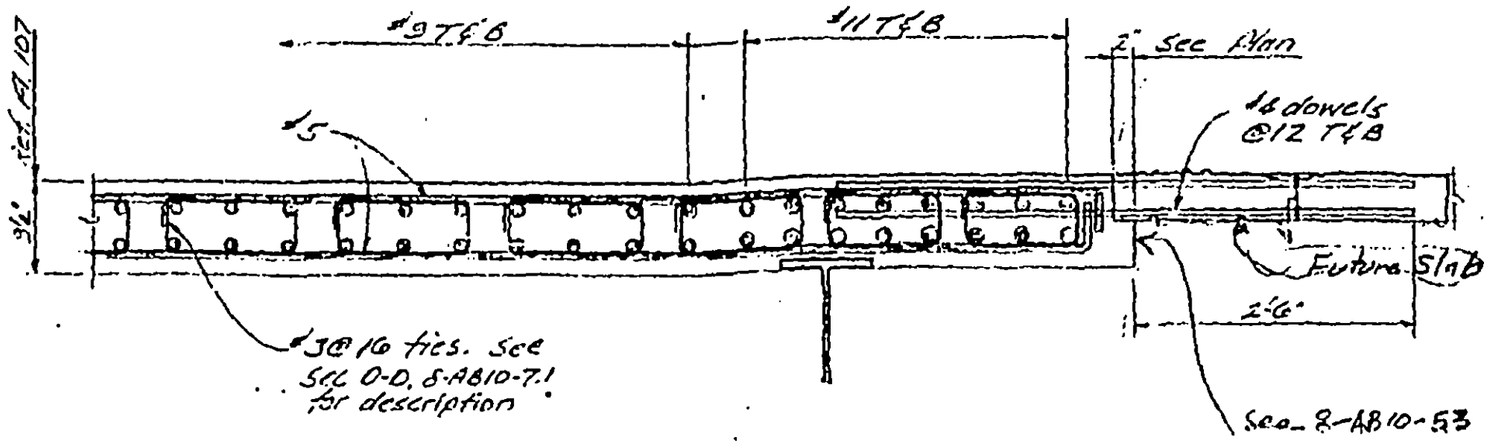

Section F-F

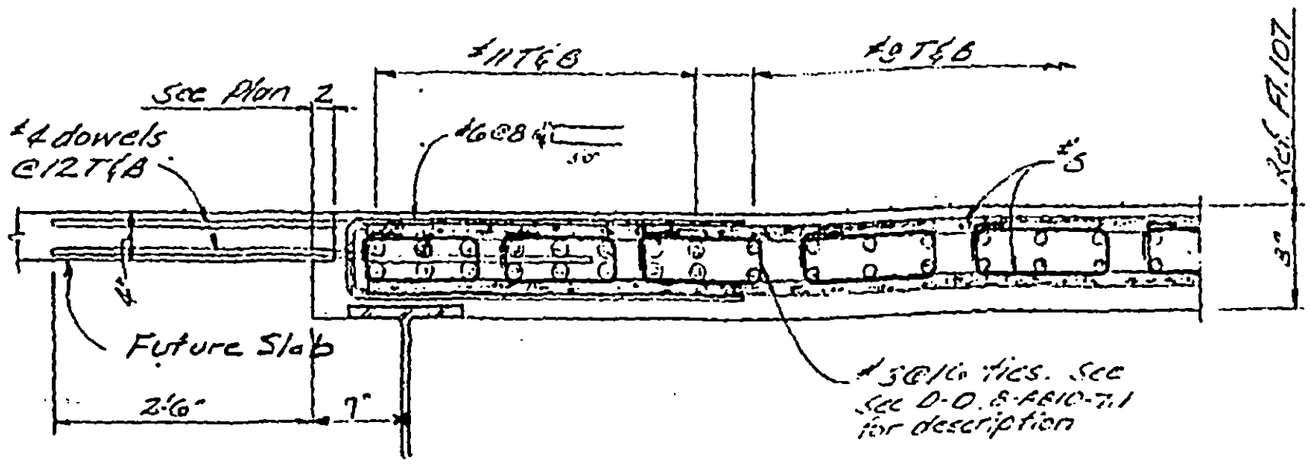

Section G-G

LICENSED PROFESSIONAL ENGINEER — LESLIE E. ROBERTSON — No. 34360 — UNIVERSITY OF THE STATE OF NEW YORK

DESIGNED

DRAWN

REVIEWED

S-AB10-3.3

SKILLING, HELLE, CHRISTIANSEN, ROBERTSON — Structural & Civil Engineers

PROJECT THE WORLD TRADE CENTER | TITLE CONSTRUCTION JOINT LAYOUT - FLOOR 107 | DATE 11/25/70

REVISIONS

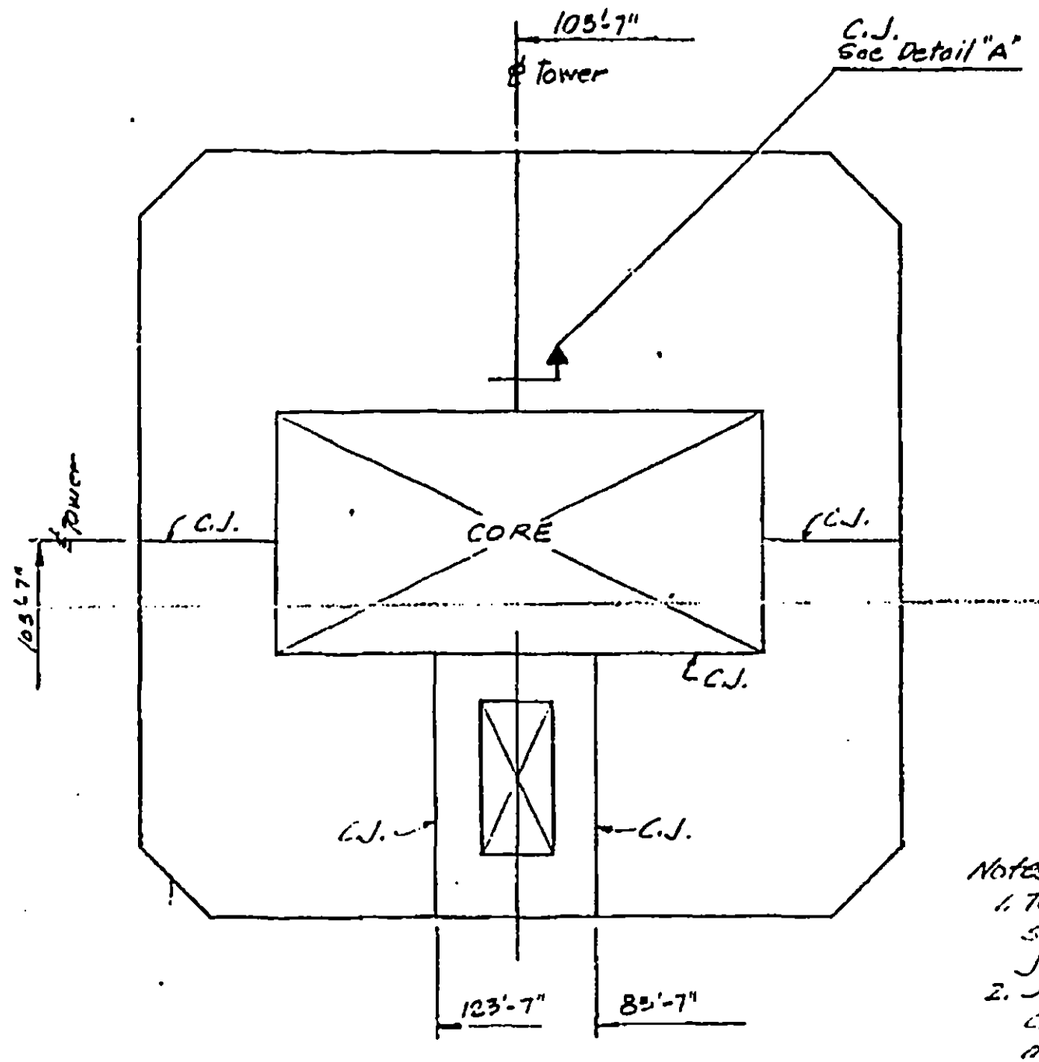

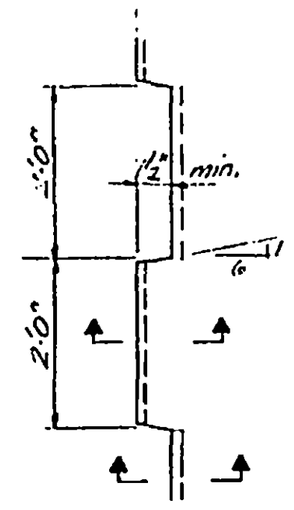

Plan

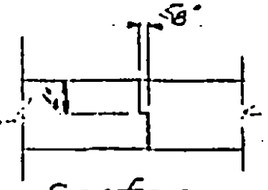

Section
Detail "A"

Notes:
1. Top and bottom reinforcement shall be continuous thru joints.
2. Joints to be thoroughly cleaned of loose material and coated with holding agent prior to completion

LICENSED PROFESSIONAL ENGINEER — LESLIE E. ROBERTSON — No 34980 — UNIVERSITY OF THE STATE OF NEW YORK

DESIGNED

DRAWN

CHECKED

REVIEWED

8-AB10-4.1

SKILLING, HELLE, CHRISTIANSEN, ROBERTSON — Structural & Civil Engineers

PROJECT THE WORLD TRADE CENTER | TITLE SECTIONS AT CORE AREA - FLOOR 107 | DATE 10-18-74

REVISIONS

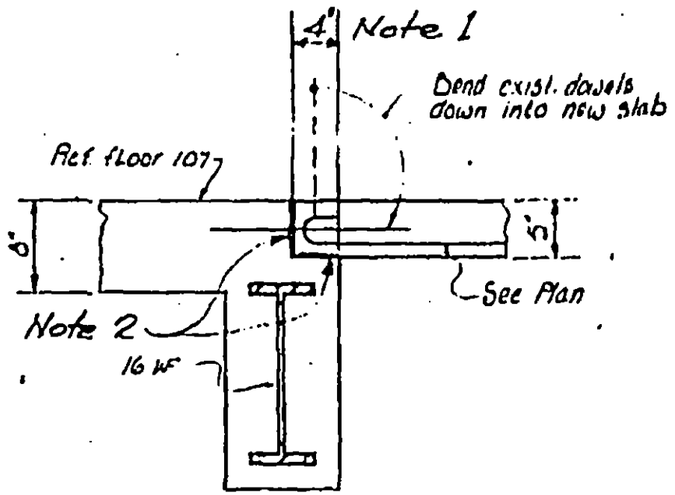

A

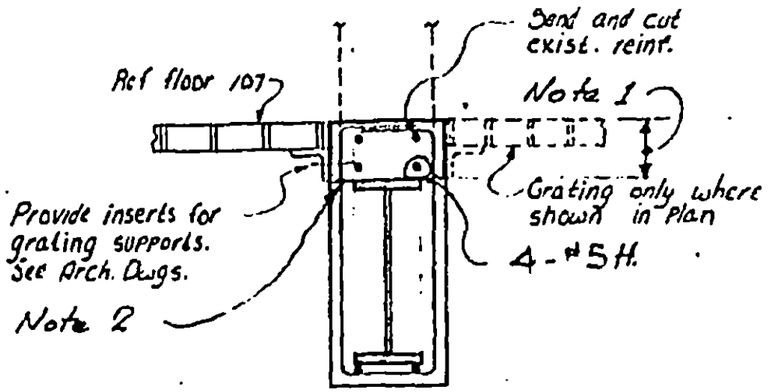

B

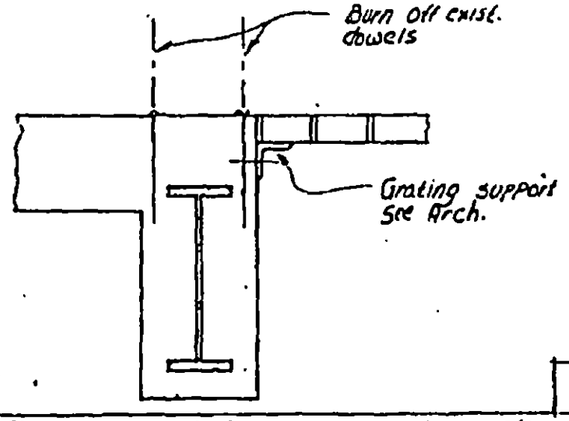

C

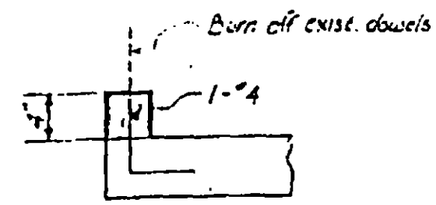

D

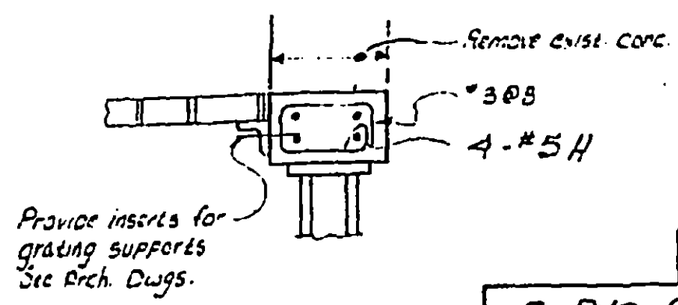

E

Note 1- Remove existing concrete without damage to existing reinforcing.
Note 2- Clean face of existing concrete and thoroughly coat entire surface with epoxy bonding compound.

LICENSED PROFESSIONAL ENGINEER LESLIE E. ROBERTSON No 34360 UNIVERSITY OF THE STATE OF NEW YORK

DESIGNED JTM

DRAWN DESMOND TWAIT

REVIEWED WOB

8-B10-9

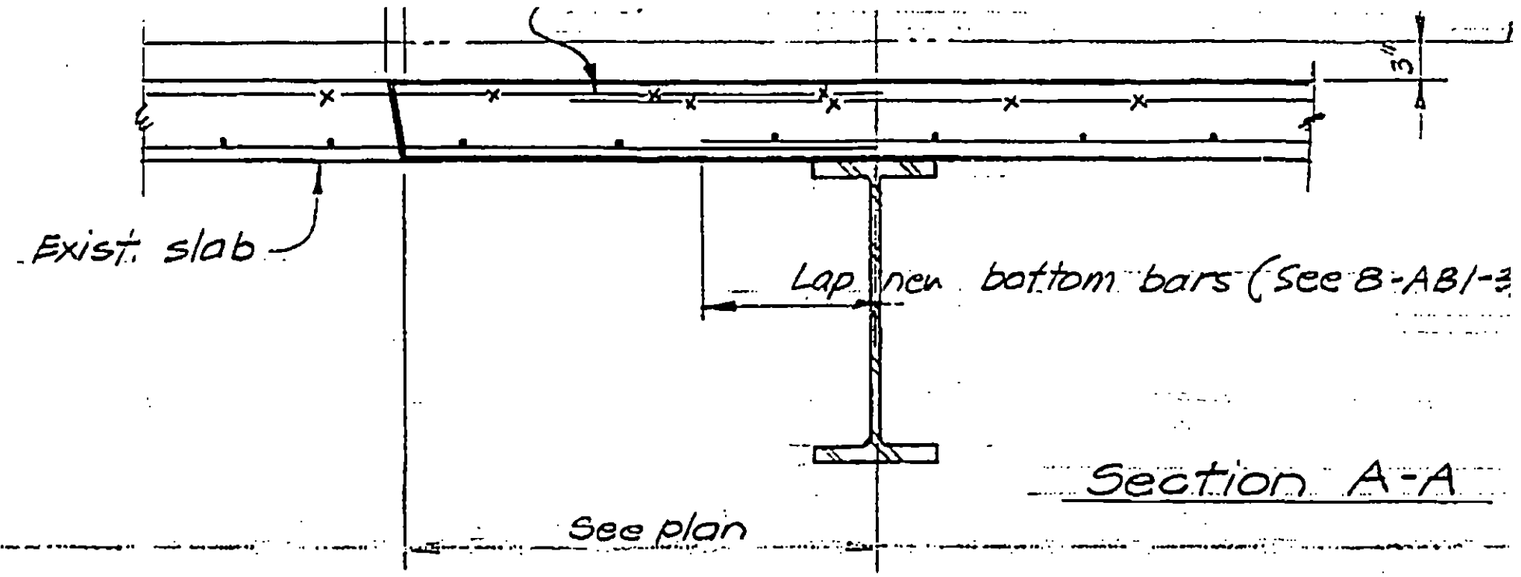

Section A-A

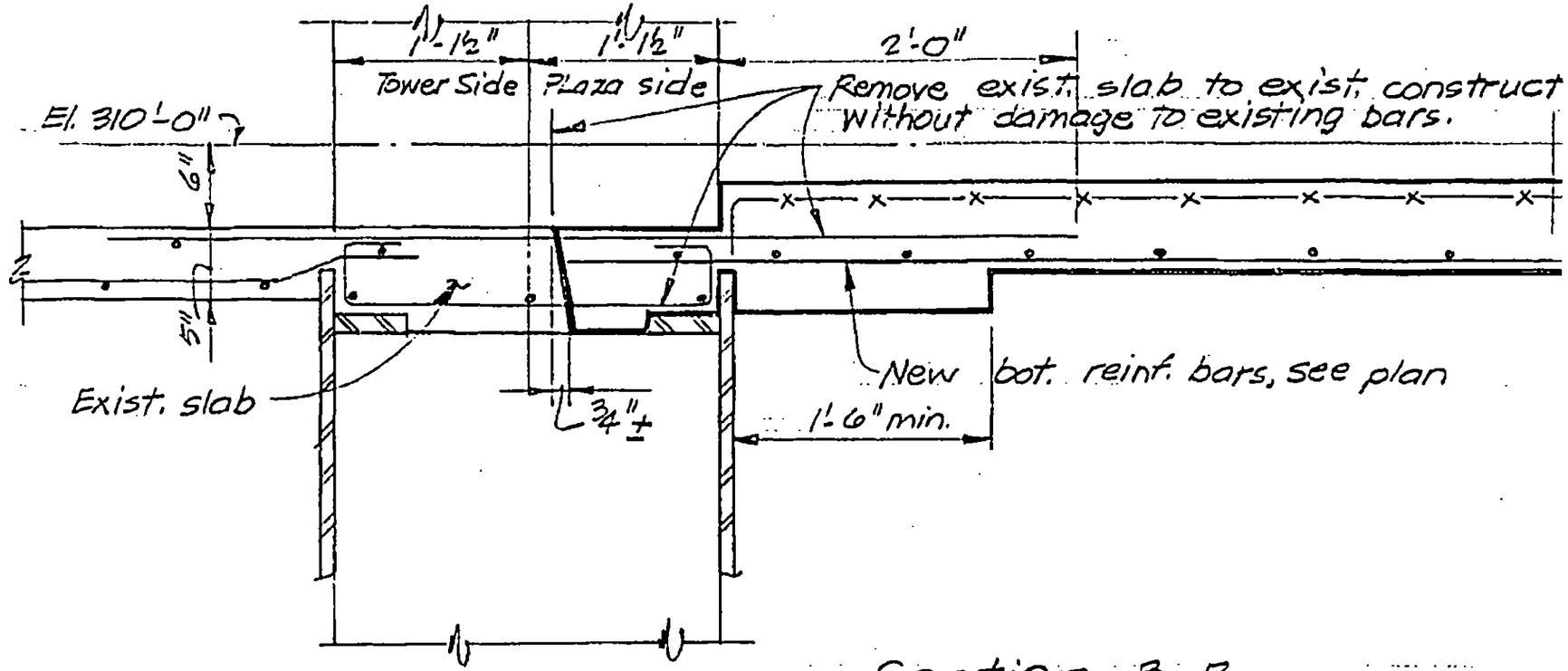

Section B-B

LICENSED PROFESSIONAL ENGINEER
LESLIE E. ROBERTSON
No. 34360
UNIVERSITY OF THE STATE OF NEW YORK

DESIGNED WAB
DRAWN
REVIEWED

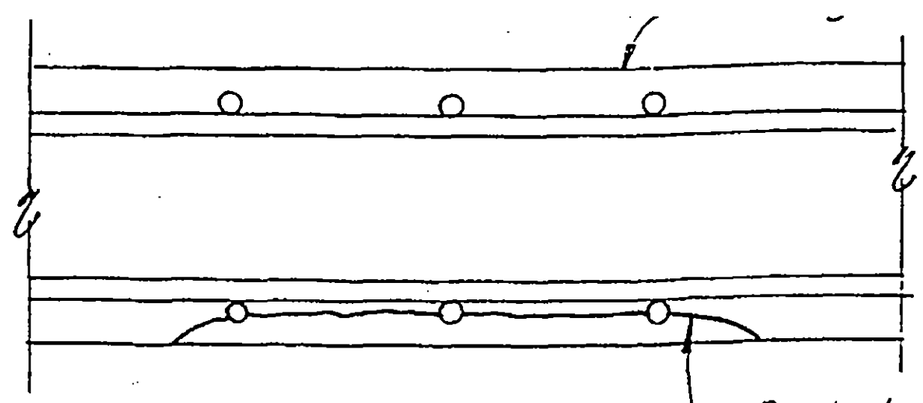

Bush hammer s
then buildout t
surfaces with
concrete.

Note: Repair to be accomplished in ar
indicated in plan as directed b
Engineer.

LICENSED PROFESSIONAL ENGINEER
LESLIE E. ROBERTSON
No. 34360
UNIVERSITY OF THE STATE OF NEW YORK

DESIGNED
WAB

DRAWN
PMBrelli

REVIEWED

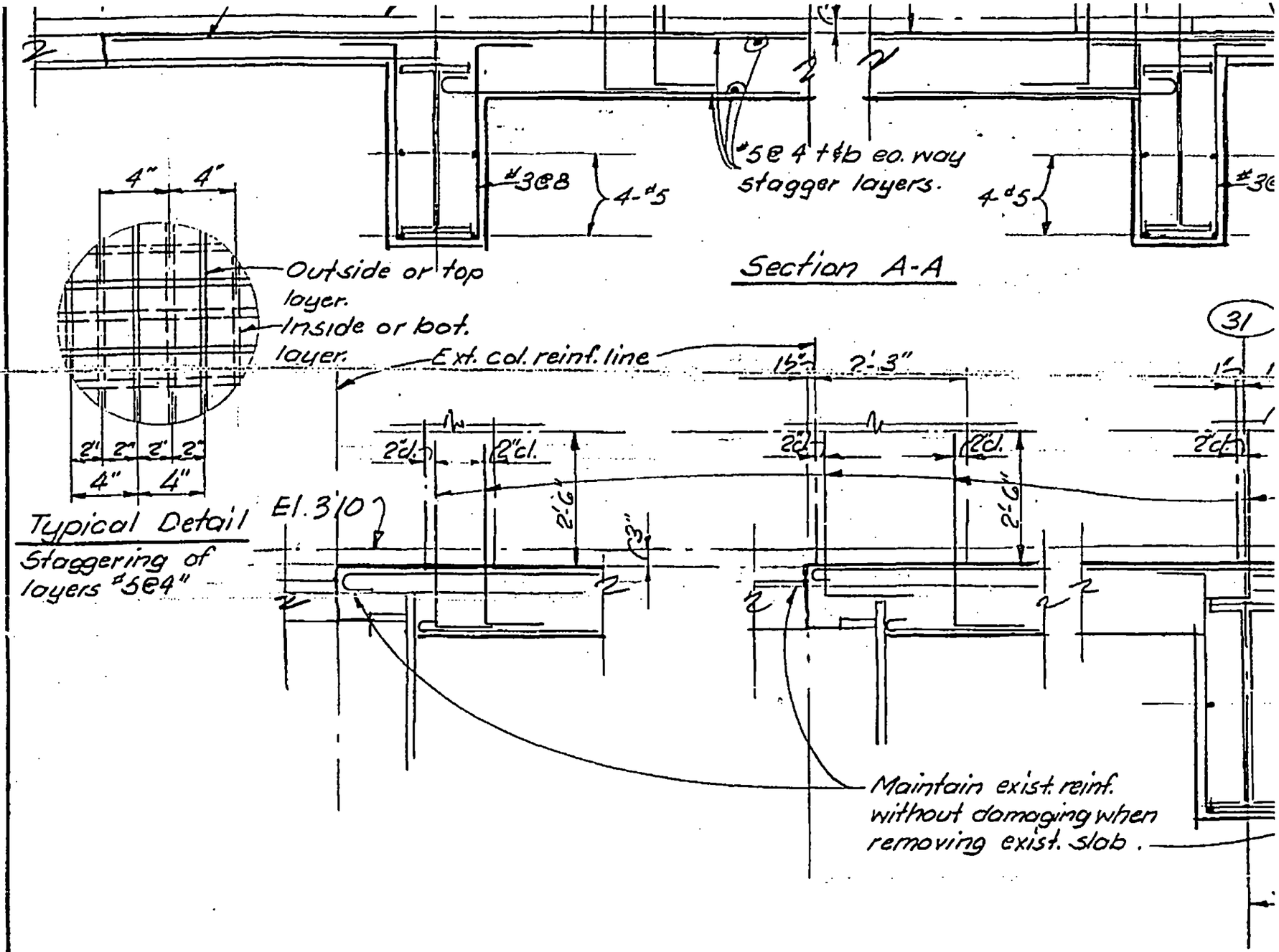

LICENSED PROFESSIONAL ENGINEER
LESLIE E. ROBERTSON
No. 34360
UNIVERSITY OF THE STATE OF NEW YORK

DESIGNED

DRAWN

REVIEWED
CO Brewer

PRINCETON DATAFILM INC.
PRINCETON SERVICE CENTER, U.S. 1, BOX 231, PRINCETON JUNCTION, N.J. 08550 (609) 799-1630

DATE FILMED

February 18, 1980

I hereby certify that the microphotographs appearing on this reel of film are true copies of the original document.

(signed) Lorraine Arold
Camera Operator

Date 2-18-80

Skilling Helle, Christiansen Robertson, P.C.